Douglas Trudeau, Realtor®, Tucson AZ - Section 333 Exemption Petition

July 12, 2014

U. S. Department of Transportation
Docket Management System
1200 New Jersey Ave, SE
Washington, DC 20590

Re: Exemption Request Section 333 of the FAA Reform Act of the Federal Aviation Regulations from 14 C.F.R. 45.23(b); 14 C.F.R. Part 21; 14 C.F.R. 61.113(a)&(b); 91.7(a); 91.9(b) (2); 91.103(b); 91.109; 119.121; 91.151(a); 91.203(a)&(b); 91.405(a); 91.407(a) (1); 91.409(a) (2); 91.417(a)&(b)

Dear Sir or Madam,

I, Douglas Trudeau, am writing pursuant to the FAA Modernization and Reform Act of 2012 and the procedures contained within 14 C.F.R. 11, to request that I, Douglas Trudeau, an owner and operator of small unmanned aircraft, be exempted from the Federal Aviation Regulations ("FARs") listed below so that I, Douglas Trudeau, may operate my small ultra light weight unmanned aircraft system ("UAS") commercially in airspace regulated by the Federal Aviation Administration ("FAA").

As described herein I, Douglas Trudeau, am a licensed Realtor within the State of Arizona; experienced in flying hobby helicopters for recreational purposes. I have added a hobby grade quad-copter[1] UAS to my inventory equipped with a GoPro3+ Black camera with intent for aerial videography/cinematography to enhance academic community awareness for those individuals and companies unfamiliar with the geographical layout of the metro Tucson area, and augment real estate listing videos; following exemption and approval by the FAA. Thereby enhancing their academic research experience for the metro Tucson area. I plan to add a second quad-copter[2] to my inventory in the future with comparable safety capabilities.

I have flown small RC electric helicopters for over six (6) years without incident. Committed to safety with each flight. My, Douglas Trudeau's, exemption request would permit operation of ultra light weight, unmanned (piloted by remote control) and comparatively inexpensive UAS(s) in tightly controlled and limited airspace.[3] Predetermined in areas away from general public, airports, heliports and vehicular traffic for community videos, and within property boundaries for individual homeowner real estate listing videos/photos. Currently, similar lightweight, remote controlled UAS's are legally operated by unmonitored amateur hobbyists with no safety plan or controls in place to prevent catastrophe. I, Douglas Trudeau, have personally instilled safety

[1] Appendix A - Blade 350 QX quad-copter Operator Manual
[2] Appendix B - Phantom quad-copter Operator Manual
[3] Appendix C - Tucson metro area 5 mile airport radius maps

protocols and controls[4] to avoid and prevent public hazard, as well as manned aircraft hazards/catastrophe. This will act to further safety protocols exclusive to lightweight UAS's specific to real estate video and photography usage as I, Douglas Trudeau, record flight data and other information gained through permitted flight operations to share with the FAA through any required FAA reports to assist with future protocol and safety regulation.

Granting my, Douglas Trudeau's, request comports with the Secretary of Transportation's (FAA Administrator's) responsibilities and authority to not only integrate UAS's into the national airspace system, but to "...establish requirements for the safe operation of such aircraft systems [UAS's] in the national airspace system" under Section 333(c) of the Reform Act specific to the use of UAS's for real estate/Realtor purposes. Further I, Douglas Trudeau, will conduct my operations in compliance with the protocols described herein or as otherwise established by the FAA.

For the reasons stated below I, Douglas Trudeau, respectfully request the grant of an exemption allowing me to operate ultra light weight, remote controlled UAS's for academic community awareness to benefit/stimulate attraction to the metro Tucson area and to enhance real estate listing videos for homeowners who cannot afford expensive manned aircraft for the same purpose. Both of which will promote local economic growth through increased employment and increased tax base. Both with public safety in mind by keeping heavier manned aircraft containing combustible fuel that that poses potential public hazard.

I. Contact Information:

Douglas Trudeau, Associate Broker
Tierra Antigua Realty
1650 E River Road, Suite 202
Tucson, AZ 85718
Office: (520) 544-2335
Mobile: (520) 954-2209
Email: Doug@TheTrudeauGroup.com

II. The Specific Sections of Title 14 of the Code of Federal Regulations From Which Douglas Trudeau Requests Exemption are:

14 CFR 21;
14 C.F.R. 45.23(b);
14 CFR 61.113 (a) & (b);
14 C.F.R. 91, et seq.;
14 CFR 407 (a) (1);
14 CFR 409 (a) (2); and,
14 CFR 417 (a) & (b).

[4] Appendix D - Personal Protocols and Controls

III. The Extent of relief Douglas Trudeau seeks and the Reason He Seeks Such Relief:

I, Douglas Trudeau, submit this application in accordance with the Reform Act, 112 P.L. 95 §§ 331-334, seeking relief from any currently applicable FARs operating to prevent me, Douglas Trudeau, contemplated commercial cinematic, academic and other flight operations within the national airspace system. The Reform Act in Section 332 provides for such integration of civil unmanned aircraft systems into our national airspace system as it is in the public's interest to do so. My, Douglas Trudeau's, ultra light weight UAS meets the definition of "small unmanned aircraft" as defined in Section 331 and therefore the integration of my ultra light weight UAS is expressly contemplated by the Reform Act. I would like to operate my ultra light weight UAS prior to the time period by which the Reform Act requires the FAA to promulgate rules governing such craft. Thereby, providing direct experience and valuable information for formal regulation that can be administered uniformly to all real estate related UAS aerial video and photography. The Reform Act guides the Secretary in determining the types of UAS's that may operate safely in our national airspace system. Considerations include: The weight, size, speed and overall capabilities of the UAS's; Whether the UAS will be operated near airports or heavily populated areas; and, Whether the UAS will be operated by line of sight. 112 P.L. 95 § 333 (a). Each of these items reflect in favor of an exemption for me, Douglas Trudeau. My UAS utilizes four (4) counter-rotating propellers for balance, control and stability. My UAS is equipped with GPS and auto return safety technology. Weighing less than five (5) pounds (far below the maximum 55 pound limit); including camera with gimbal.

I, Douglas Trudeau, considers safety as foremost with each flight. My small unmanned aircraft is designed to hover in place via GPS and operate in less than a 24 knot (15 mph) wind. For safety, stability and fear of financial loss I will not fly in winds exceeding 16 kph (10 mph). Built in safety systems include a GPS mode that allows my UAS to hover in place when radio controls are released. With three modes to choose from, I utilize the *Smart Mode*[5] for aerial videography/photography. This is the safest, most reliable and stable mode to prevent accident and hazard. When pilot communication is lost UAS is designed slowly descend to point of take off. I do not operate my UAS near airports, Hospitals nor Police heliports, and do not operate near areas where general public is within fifty to one hundred (50-100) yards depending on location, conditions and weather. I am constantly on alert for any manned aircraft (Police/Medical helicopters, etc.) and prepared to land/abort immediately to the nearest and safest ground point should a manned aircraft approach my location or I suspect manned aircraft may approach near my location. My UAS is capable of vertical and horizontal operations, and are flown only within my line of sight of me, as the remote control pilot. Utilizing battery power rather than combustible fuels, flights generally last between three (3) to seven (7) minutes, with an altitude under one hundred fifty (150) feet. I, Douglas

[5] Smart Mode includes safe circle for operation, position hold, self-leveling, altitude command, GPS, return home feature, and safety control to return home or land in the event of communication interruption between RC transmitter and UAS. See Appendix A - Operator Manual.

Trudeau, utilize a fresh fully charged battery with each flight as a safety precaution; full flight time limit for each battery is nine (9) to twelve (12) minutes as tested. I do not operate my UAS at or below manufacture recommend minimum charge levels for operation; preferring to remain well within a safe operating range to insure adequate communication between radio control and UAS to eliminate potential for crash, loss of control or hazard. Reserve batteries are at hand with each exercise to insure replacement for sufficient safe level of operation. I do not believe in taking risk that may cause a crash, that could create hazard to the public/property/manned aircraft, and have no desire to lose an investment. I have clocked numerous practice flights in remote areas as a hobbyist simulating flights for future commercial use to gain familiarization with the characteristics of this specific UAS's performance under different temperature and weather conditions. I also practice computerized simulated flights to maintain adequate skills and response reflex time. All for the sake of safety.

I, Douglas Trudeau's, am extremely cautious when operating of my UAS/ultra light weight unmanned aircraft and will not "create a hazard to users of the national airspace system or the public." 112 P.L. 95 § 333 (b). Given the small size and weight of my UAS it falls well within Congress's contemplated safety zone when it promulgated the Reform Act and the corresponding directive to integrate UAS's into the national airspace system. Douglas Trudeau's UAS, used in hobby flight, has a demonstrable safety record and does not pose any threat to the general public or national security.

IV. How Douglas Trudeau's Request Will Benefit the Public As A Whole:

Aerial videography for geographical awareness and for real estate marketing has been around for a long time through manned fixed wing aircraft and helicopters. For small budget real estate companies and average homeowners the expense of such aerial videography is cost prohibitive. Only large companies and high end Realtors or luxury homeowners can afford to absorb such expense. Depriving non-luxury homeowners and lower budget Realtors from a valuable marketing tool. Manned aircraft pose a threat to the public through potential catastrophic crash that the Tucson community has experienced in the past with military aircraft and medical helicopter crashes within the city of Tucson. Each resulting in loss of life. Each with combustible fuel that exploded and burned on impact. Police helicopters have made emergency hard landings within city limits. My, Douglas Trudeau's, UAS pose no such threat since size and lack of combustible fuel alleviates any potential threat to the public.

Congress has already proclaimed that it is in the public's interest to integrate commercially flown UAS's into the national airspace system, hence the passing of the Reform Act. Granting my, Douglas Trudeau's, exemption request furthers the public interest through academic/visual awareness of the geographical benefits in and around the metro Tucson area. My ultra light weight UAS is battery powered and creates no emissions that can harm the environment. The consequence of my ultra light weight UAS crashing is far less than a full size helicopter or fixed wing aircraft; which are heavy, contain combustible fuel and can cause catastrophic devastation to the public.

The public's interest is furthered by minimizing ecological and crash threat by permitting aerial video/photo capture through my battery operated ultra light weight UAS's. Permitting me, Douglas Trudeau, to immediately fly within national air space furthers economic growth. Granting my exemption request substantially furthers the economic impact for the metro Tucson community for companies looking to relocate or build in the Tucson metro area as well as individuals looking to relocate for career advancement through academic and geographical awareness. Both of which serve as a stimulus to the community.

V. Reasons Why Douglas Trudeau's Exemption Will Not Adversely Affect Safety Or How The Exemption Will Provide a Level of Safety At Least Equal To Existing Rule:

My, Douglas Trudeau's, exemption will not adversely affect safety. Quite the contrary, for the reasons stated permitting me, Douglas Trudeau, to log more flight time in FAA controlled airspace, with communication with the FAA, will allow me to contribute to the innovation and implementation of new and novel, as of yet undiscovered safety protocols for Realtors that can be embraced by the NAR[6], AAR[7], and TAR[8] for development in cooperation with the FAA. In addition I, Douglas Trudeau, submit the following representations of enhancements to current aerial videography and photography for real estate:

- My UAS weighs less than 5 pounds complete with a small ultra light weight high quality GoPro 3+ Black camera;
- I only operate my UAS below 200 feet[9] (well within the 400 foot permissible ceiling set by the FAA Modernization and Reform Act of 2012);
- my UAS only operate for 3-7 minutes per flight;
- I land my UAS prior to manufacturer recommended minimum level of battery power;
- I pilot my UAS through remote control only by line of sight;
- My UAS has GPS a flight safety feature whereby it hovers and then slowly lands if communication with the remote control pilot is lost;
- I actively analyze flight data and other sources of information to constantly update and enhance safety protocols;
- I only operate in reasonably safe environment that are strictly controlled, are away from power lines, elevated lights, airports and actively populated areas;
- I conduct extensive pre-flight inspections and protocol, during which safety carries primary importance;
- I always obtains all necessary permissions prior to operation; and,
- I have procedures in place to abort flights in the event of safety breaches or potential danger.

[6] National Association of Realtors, http://www.realtor.org/
[7] Arizona Association of Realtors, http://www.aaronline.com/
[8] Tucson Association of Realtors, http://www.tarmls.com/
[9] Blade 350 QX quad-copter altitude ceiling is 147 feet when flown in Smart mode (see Appendix A Operator Manual)

My, Douglas Trudeau's, safety protocols provide a level of safety equal to or exceeding existing rules. It is important to note that absent the integration of commercial UAS into our national airspace system, helicopters are the primary means of aerial video and photography for community awareness and real estate. While the safety record of such helicopters is remarkably astounding, there has been local incident involving loss of life as well as extensive property damage; it is far safer to operate a battery powered ultra light weight UAS.

- First, the potential loss of life is diminished because UAS's carry no people on board and I only operates my UAS in specific areas away from mass populations.
- Second, there is no fuel on board a UAS and thus the potential for fire or explosions is greatly diminished.
- Third, the small size and extreme maneuverability of my UAS allow me to remotely pilot away from and avoid hazards quickly and safely.
- Lastly, given its small size and weight, even when close enough to capture amazing images, my UAS need not be so close to the objects they are focused on through the technology and use of post editing software allowing pan and zoom.

Accordingly, my UAS has been experimentally operated for familiarization/competency and will continue to operate at and above current safety levels.

VI. A Summary The FAA May Publish in the Federal Register:

A. 14 C.F.R. 21 and 14 C.F.R. 91: Airworthiness Certificates, Manuals and The Like.

14 C.F.R. 21, Subpart H, entitled Airworthiness Certificates, sets forth requirements for procurement of necessary airworthiness certificates in relation to FAR § 91.203(a)(1). The size, weight and enclosed operational area of my, Douglas Trudeau's, UAS permits exemption from Part 21 because my UAS meets (and exceeds) an equivalent level of safety pursuant to Section 333 of the Reform Act. The FAA is authorized to exempt aircraft from the airworthiness certificate requirement under both the Act (49 U.S.C. § 44701 (f)) and Section 333 of the Reform Act. Both pieces of legislation permit the FAA to exempt UAS's from the airworthiness certificate requirement in consideration of the weight, size, speed, maneuverability and proximity to areas such as airports and dense populations. My, Douglas Trudeau's, current and projected UAS's meet or exceed each of the elements.

14 C.F.R. 91.7(a) prohibits the operation of an aircraft without an airworthiness certificate. As no such certificate will be applicable in the form contemplated by the FARs, this Regulation is inapplicable.

14 C.F.R. § 91.9 (b) (2) requires an aircraft flight manual in the aircraft. As there are no on board pilots or passengers, and given the size of the UAS's, this Regulation is inapplicable. An equivalent level of safety will be achieved by maintaining a

safety/flight manual delineating areas of where safety can be defined.[10] The FAA has previously issued exemptions to this regulation in Exemption Nos. 8607, 8737, 8738, 9299, 9299A, 9565, 9565B, 10167, 10167A, 10602, 10700 and 32827.

14 C.F.R. § 91.121 regarding altimeter settings is inapplicable insofar as my UAS utilizes electronic global positioning systems with a barometric sensor.

14 C.F.R. § 91.203 (a) and (b) provides for the carrying of civil aircraft certifications and registrations. They are inapplicable for the same reasons described above. The equivalent level of safety will be achieved by maintaining any such required certifications and registrations by me, Douglas Trudeau.

B. 14 C.F.R. § 45.23: Marking of The Aircraft.

Applicable Codes of Federal Regulation require aircraft to be marked according to certain specifications. My UAS are, by definition, unmanned. They therefore do not have a cabin, cockpit or pilot station on which to mark certain words or phrases. Further, two-inch lettering is difficult to place on such small aircraft with dimensions smaller that minimal lettering requirement. Regardless, I will mark its UASs in the largest possible lettering by placing the word "EXPERIMENTAL" on its fuselage as required by 14 C.F.R. §45.29 (f) so that I the pilot, or anyone assisting me as a spotter with the UAV will see the markings. The FAA has previously issued exemptions to this regulation through Exemptions Nos. 8738, 10167, 10167A and 10700.

C. 14 C.F.R. § 61.113: Private Pilot Privileges and Limitations: PIC.

Pursuant to 14 C.F.R. §§ 61.113 (a) & (b), private pilots are limited to non-commercial operations. I, Douglas Trudeau, can achieve an equivalent level of safety as achieved by current Regulations because my UAS does not carry any pilots or passengers. Further, while helpful, a pilot license will not ensure remote control piloting skills. The risks attended to the operation of my UAS is far less than the risk levels inherent in the commercial activities outlined in 14 C.F.R. § 61, et seq. Thus, allowing me, Douglas Trudeau, to operate my UAS meet and exceed current safety levels in relation to 14 C.F.R. §61.113 (a) & (b).

D. 14 C.F.R. 91.119: Minimum Safe Altitudes.

14 C.F.R. § 91.119 prescribes safe altitudes for the operation of civil aircraft. It allows helicopters to be operated at lower altitudes in certain conditions. My UAS will never operate at an altitude greater than 200 AGL; safely below the standard of 400 AGL. I, Douglas Trudeau, will however operate my UAS in safe areas away from public and traffic, providing a level of safety at least equivalent to or below those in relation to minimum safe altitudes. Given the size, weight, maneuverability and speed of my UAS, an equivalent or higher level of safety will be achieved.

E. 14 C.F.R. 91.405 (a); 407 (a) (1); 409 (a) (2); 417(a) & (b): Maintenance Inspections.

[10] Appendix E - Safety/Flight Manual

> The above-cited Regulations require, amongst other things, aircraft owners and operators to "have [the] aircraft inspected as prescribed in subpart E of this part and shall between required inspections, except as provided in paragraph (c) of this section, have discrepancies repaired as prescribed in part 43 of this chapter. . . ."

These Regulations only apply to aircraft with an airworthiness certificate. They will not, therefore, apply to my, Douglas Trudeau's, UAS. However, as a safety precaution I inspect my UAS before and after each flight.

A Summary The FAA May Publish in the Federal Register: A. 14 C.F.R. 21 and 14 C.F.R. 91: Airworthiness Certificates, Manuals and The Like. 14 C.F.R. 21, Subpart H, entitled Airworthiness Certificates, sets forth requirements for procurement of necessary airworthiness certificates in relation to FAR § 91.203(a)(1). The size, weight and enclosed operational area of my UAS permits exemption from Part 21 because my, Douglas Trudeau's, UAS meets an equivalent level of safety pursuant to Section 333 of the Reform Act. The FAA is authorized to exempt aircraft from the airworthiness certificate requirement under both the Act (49 U.S.C. § 44701 (f)) and Section 333 of the Reform Act. Both pieces of legislation permit the FAA to exempt UAS's from the airworthiness certificate requirement in consideration of the weight, size, speed, maneuverability and proximity to areas such as airports and dense populations. My UAS meets or exceeds each of the elements. 14 C.F.R. 91.7(a) prohibits the operation of an aircraft without an airworthiness certificate. As no such certificate will be applicable in the form contemplated by the FARs, this Regulation is inapplicable. 14 C.F.R. § 91.9 (b) (2) requires an aircraft flight manual in the aircraft. As there are no pilots or passengers, and given the size of the UAS's, this Regulation is inapplicable. An equivalent level of safety will be achieved by maintaining a manual. The FAA has previously issued exemptions to this regulation in Exemption Nos. 8607, 8737, 8738, 9299, 9299A, 9565, 9565B, 10167, maintenance program that involves regular software updates and curative measures for any damaged hardware. Therefore, an equivalent level of safety will be achieved.

In summary, Douglas Trudeau seeks an exemption from the following Regulations:

14 C.F.R. 21, subpart H; 14 C.F.R. 45.23(b); 14 C.F.R. §§ 61.113 (a) & (b); 14 C.F.R. § 91.7 (a); 14 C.F.R. § 91.9 (b)(2); 14 C.F.R. § 91.103(b); 14 C.F.R. § 91.109; 14 C.F.R. § 91.119; 14 C.F.R. § 91.121; 14 C.F.R. § 91.151(a); 14 C.F.R. §§ 91.203(a) and (b); 14 C.F.R. § 91.405 (a); 14 C.F.R. § 91.407 (a)(1); 14 C.F.R. § 91.409 (a)(2); 14 C.F.R. § 91.409 (a) (2); and, 14 C.F.R. §§ 91.417 (a) & (b) to commercially operate my, Douglas Trudeau's, small unmanned vehicle/lightweight unmanned aircraft vehicle in community awareness and real estate operations, and to develop economic platforms for real estate to enhance the experience of those seeking to relocate to the metro Tucson area. Currently, area awareness and real estate aerial videography/photography relies primarily on the use of larger aircraft running on combustible fuel. Posing potential risk to the public. Granting my, Douglas Trudeau's, request for exemption will reduce current risk levels and thereby enhance safety. My UAS craft do not contain potentially

explosive fuel, is smaller, lighter and more maneuverable than conventional real estate video and photographic aircraft with much less flight time. Further, I operate at lower altitudes and in controlled airspace eliminating potential public risk flying to and from established air fields. I, Douglas Trudeau, have been informally analyzing flight information and will compile safety protocols and the implementation of a flight operations manual for real estate usage that exceeds currently accepted means and methods for safe flight. Formal collection of information shared with the FAA will enhance the FAA's internal efforts to establish protocols for complying with the FAA Modernization and Reform Act of 2012. There are no personnel on board my, Douglas Trudeau's, UAS and therefore the likelihood of death or serious bodily injury is significantly diminished. My, Douglas Trudeau's, operation of my UAS, weighing less than 5 pounds and travelling at lower speeds within limited areas will provide an equivalent level of safety as that achieved under current FARs. Accordingly I, Douglas Trudeau, respectfully request that the FAA grant my exemption request and am willing to cooperate in sharing information to benefit the FAA, safety of manned aircraft, and the general public at large.

Respectfully submitted,

Douglas Trudeau, Associate Broker
Tierra Antigua Realty
1650 E River Road, Suite 202
Tucson, AZ 85718

Appendix A

QX 350 Quad Copter

Operator Manual

BLADE® 350 QX

#1 BY DESIGN

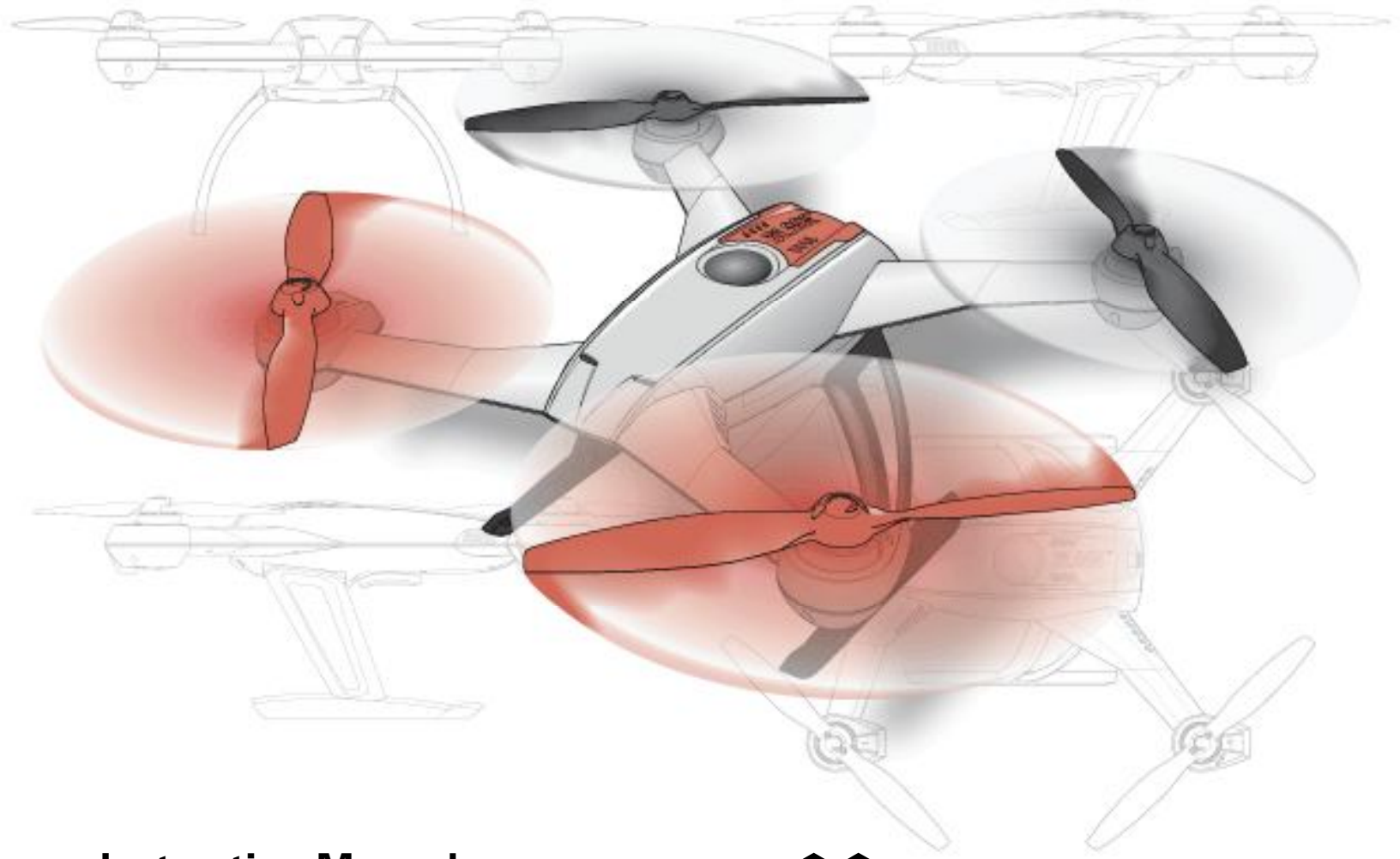

Instruction Manual
Bedienungsanleitung
Manuel d'utilisation
Manuale di Istruzioni

SAFE™

RTF

BNF™

NOTICE

All instructions, warranties and other collateral documents are subject to change at the sole discretion of Horizon Hobby, Inc. For up-to-date product literature, visit horizonhobby.com and click on the support tab for this product.

Meaning of Special Language

The following terms are used throughout the product literature to indicate various levels of potential harm when operating this product:

NOTICE: Procedures, which if not properly followed, create a possibility of physical property damage AND a little or no possibility of injury.

CAUTION: Procedures, which if not properly followed, create the probability of physical property damage AND a possibility of serious injury.

WARNING: Procedures, which if not properly followed, create the probability of property damage, collateral damage, and serious injury OR create a high probability of superficial injury.

WARNING: Read the ENTIRE instruction manual to become familiar with the features of the product before operating. Failure to operate the product correctly can result in damage to the product, personal property and cause serious injury.

This is a sophisticated hobby product. It must be operated with caution and common sense and requires some basic mechanical ability. Failure to operate this Product in a safe and responsible manner could result in injury or damage to the product or other property. This product is not intended for use by children without direct adult supervision. Do not use with incompatible components or alter this product in any way outside of the instructions provided by Horizon Hobby, Inc. This manual contains instructions for safety, operation and maintenance. It is essential to read and follow all the instructions and warnings in the manual, prior to assembly, setup or use, in order to operate correctly and avoid damage or serious injury.

Age Recommendation: Not for children under 14 years. This is not a toy.

General Safety Precautions and Warnings

- Always keep a safe distance in all directions around your model to avoid collisions or injury. This model is controlled by a radio signal subject to interference from many sources outside your control. Interference can cause momentary loss of control.
- Always operate your model in open spaces away from full-size vehicles, traffic and people.
- Always carefully follow the directions and warnings for this and any optional support equipment (chargers, rechargeable battery packs, etc.).
- Always keep all chemicals, small parts and anything electrical out of the reach of children.
- Always avoid water exposure to all equipment not specifically designed and protected for this purpose. Moisture causes damage to electronics.
- Never place any portion of the model in your mouth as it could cause serious injury or even death.
- Never operate your model with low transmitter batteries.
- Always keep aircraft in sight and under control.
- Always move the throttle fully down at rotor strike.
- Always use fully charged batteries.
- Always keep transmitter powered on while aircraft is powered.
- Always remove batteries before disassembly
- Always keep moving parts clean.
- Always keep parts dry.
- Always let parts cool after use before touching.
- Always remove batteries after use.
- Never operate aircraft with damaged wiring.
- Never touch moving parts.

CAUTION: The ESCs for the 350 QX are not compatible with any other product, and the 350 QX is not compatible with any other ESCs. Use of any other ESCs on the 350 QX will cause a crash, which may result in property damage and/or personal injury.

WARNING AGAINST COUNTERFEIT PRODUCTS: If you ever need to replace a Spektrum component found in a Horizon Hobby product, always purchase from Horizon Hobby, Inc. or a Horizon Hobby authorized dealer to ensure authentic high-quality Spektrum product. Horizon Hobby, Inc. disclaims all support and warranty with regards, but not limited to, compatibility and performance of counterfeit products or products claiming compatibility with DSM or Spektrum.

BLADE 350 QX

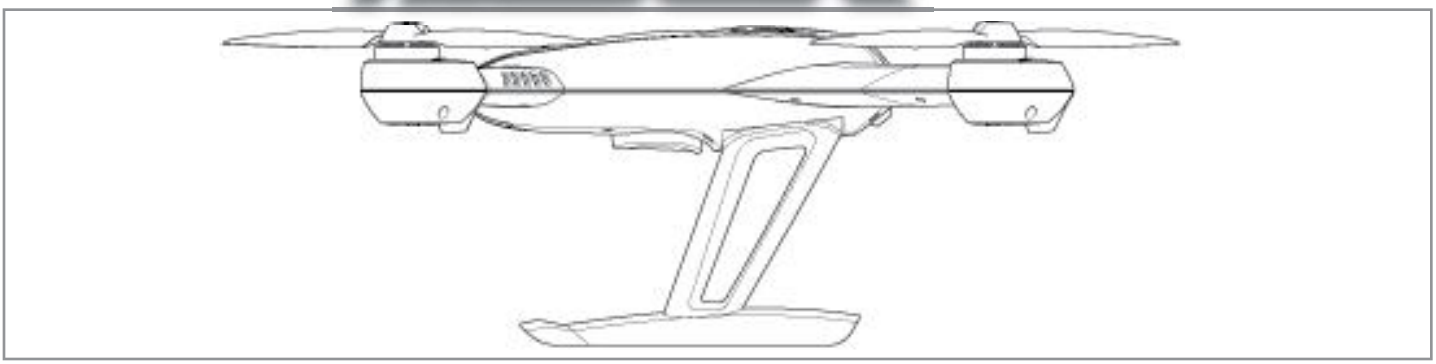

Thank you for purchasing the Blade 350 QX quadcopter. You are in for an exciting experience with this exceptional flying machine. With GPS, pressure and compass sensors added to the SAFE™ (Sensor Assisted Flight Envelope) system, the 350 QX has some incredible features. Position hold, altitude command and self-leveling provide you with a smooth and manageable flight performance. With the addition of the SAFE Circle™, Stick Relativity and Return Home functions, the 350 QX makes it more practical and easier to fly for new pilots without RC experience. The Blade 350 QX uses LED codes to communicate flight modes, GPS functions and errors for which you will need the manual. To assure you have a safe and fun experience with your new quadcopter, it is critical that you take the time to read and understand this manual and all the features this aircraft contains.

Table of Contents

Box Contents 4
Charging Warnings....4
Low Voltage Cutoff (LVC) 4
Charging the Flightline Battery....4
Mounting a Camera 5
Transmitter Setup (BNF)....6
Transmitter Control Layout (RTF) 7
Connecting the Flight Battery....7
Binding 8
Flight Mode Switches....9
Flight Modes Explained 9
Audible Alerts and LED Codes 10
GPS Functionality of the 350 QX....12
Flight Guidelines and Warnings 12
Preparing the 350 QX for Flight....13
Flying the 350 QX 13
Airframe Maintenance....15
Compass Calibration....16
Pressure Sensor Calibration 16
Accelerometer Calibration....16
ESC and Motor Assignment Procedure 17
Troubleshooting 17
Limited Warranty 18
Warranty and Service Contact Information 18
FCC Information....19
IC Information....19
Compliance Information for the European Union....19

Blade 350 QX Specifications			
Length	18.30 in (465mm)	**Main Rotor Diameter**	22.80 in (580mm)
Height	5.43 in (138mm)	**Flying Weight**	24 oz (680 g)

Component		RTF	BNF
Airframe	Blade 350 QX Quadcopter	included	included
Motors	4x Brushless Outrunner Motor, 1100Kv	installed	installed
ESCs	4x 10-Amp Brushless ESC	installed	installed
Battery	3S 11.1V 2200mAh 30C Li-Po	included	included
Charger	2–3S Li-Po Balancing DC Charger, 0.5–3A	included	included
Transmitter	DSM2®/DSMX® compatible transmitter	included	required

To register your product online, visit www.bladehelis.com

Box Contents

- Blade 350 QX
- Camera Mount
- 3S 11.1V 2200mAh Li-Po Battery Pack
- 2–3S DC Li-Po Balancing Charger
- DX5e DSMX 5-Channel Transmitter (RTF only)
- 4 AA Batteries (RTF only)

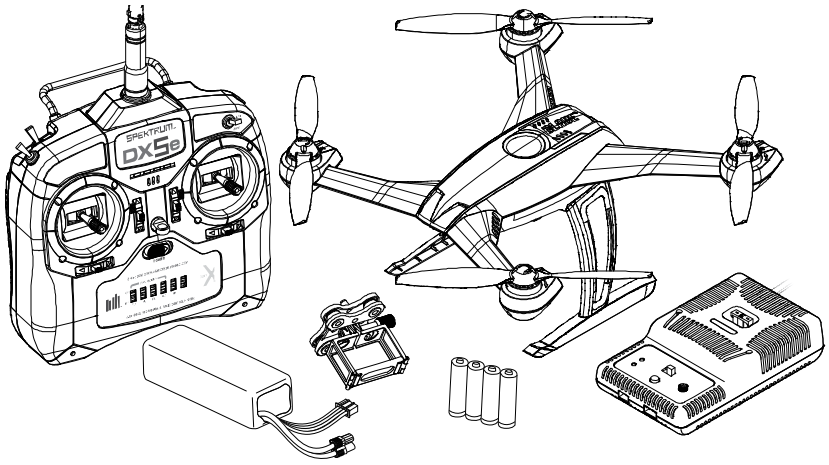

Charging Warnings

The Battery Charger (EFLC3010) included with your quadcopter has been designed to safely charge the Li-Po battery.

⚠ **CAUTION:** All instructions and warnings must be followed exactly. Mishandling of Li-Po batteries can result in a fire, personal injury and/or property damage.

- By handling, charging or using the included Li-Po battery, you assume all risks associated with lithium batteries.
- If at any time the battery begins to balloon or swell, discontinue use immediately. If charging or discharging, discontinue and disconnect. Continuing to use, charge or discharge a battery that is ballooning or swelling can result in fire.
- Always store the battery at room temperature in a dry area for best results.
- Always transport or temporarily store the battery in a temperature range of 40–120º F (5–49° C). Do not store battery or model in a car or direct sunlight. If stored in a hot car, the battery can be damaged or even catch fire.
- Always charge batteries away from flammable materials.
- Always inspect the battery before charging
- Always disconnect the battery after charging, and let the charger cool between charges.
- Always constantly monitor the temperature of the battery pack while charging.
- ONLY USE A CHARGER SPECIFICALLY DESIGNED TO CHARGE LI-PO BATTERIES. Failure to charge the battery with a compatible charger may cause a fire resulting in personal injury and/or property damage.
- Never discharge Li-Po cells to below 3V under load.
- Never cover warning labels with hook and loop strips.
- Never leave charging batteries unattended.
- Never charge batteries outside recommended levels.
- Never charge damaged batteries.
- Never attempt to dismantle or alter the charger.
- Never allow minors to charge battery packs.
- Never charge batteries in extremely hot or cold places (recommended between 40–120° F) or (5–49° C) or place in direct sunlight.

Low Voltage Cutoff (LVC)

Low voltage cutoff (LVC) protects the Li-Po battery from over-discharge in flight and activates when the battery reaches a preset value. When the battery is discharged to the cutoff point, the aircraft will display rapidly flashing red, green and blue LEDs to warn you it's time to land. When you see this LED code, land immediately to prevent over-discharge and damage to the battery.

When the LVC is activated, you have approximately 2 minutes until the battery is depleted and can no longer maintain a hover. Repeated flying to LVC will damage the battery.

NOTICE: Crash damage and battery damage are not covered under warranty.

IMPORTANT: Always disconnect and remove the Li-Po battery from the aircraft after each flight. Charge your Li-Po battery to about half capacity before storage. During storage, make sure the battery charge does not fall below 3V per cell. A connected battery will result in trickle discharge.

Charging the Flight Battery

E-flite® 2–3S Li-Po Balancing Charger Specifications

- Input power: 10.5–15.0V DC, 3-amp
- Charges 2- to 3-cell Li-Po packs with minimum capacity of 500mAh

E-flite 3S 11.1V 2200mAh Li-Po Battery Pack

The E-flite® 3S Li-Po battery pack features a balancing lead that allows you to safely charge your battery pack when used with the included E-flite Li-Po balancing charger.

⚠ **CAUTION:** The balance connector must be inserted into the correct port of your charger prior to charging.

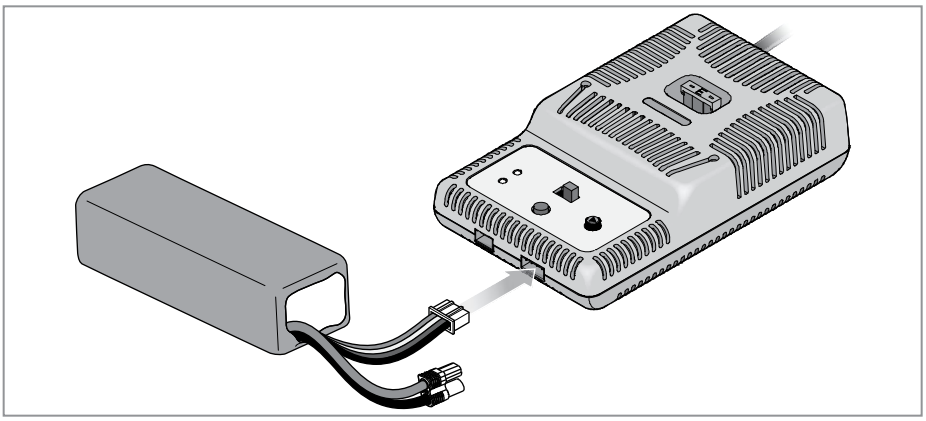

The Battery Charging Process
1. Charge only batteries that are cool to the touch and are not damaged. Look at the battery to make sure it is not damaged e.g., swollen, bent, broken or punctured.
2. Attach the input cord of the charger to an appropriate power supply, such as a 12V battery or 12V DC power supply.
3. When the Li-Po charger has been correctly powered up, there will be an approximate 3-second delay, then an audible “beep” and the green (ready) LED will flash.
4. Turn the control on the Amps selector so the arrow points to the charging rate required for the battery (the 2200mAh Li-Po battery will charge at 2.0 amps). DO NOT change the charge rate once the battery begins charging.
5. Move the cell selector switch to 3-cell for your battery.
6. Connect the balancing lead of the battery to the 3-cell (4 pin) charger port and press the Start button to begin battery charging.
7. The green and red LEDs may flash during the charging process when the charger is balancing cells. Balancing prolongs the life of the battery.
8. When the battery is fully charged, a beep will sound for about 3 seconds and the green LED will shine continuously. Attempting to charge an over-discharged battery will cause the charger to repeatedly flash and beep, indicating an error has occurred.
9. Always unplug the battery from the charger immediately upon completion of charging.

CAUTION: Overcharging a battery can cause a fire.

NOTICE: If using a battery other than the included Li-Po battery, refer to your battery manufacturer’s instructions for charging.

Mounting a Camera

IMPORTANT: Consult local laws and ordinances before installing and operating any type of photograph-capable or video recording device in this product.

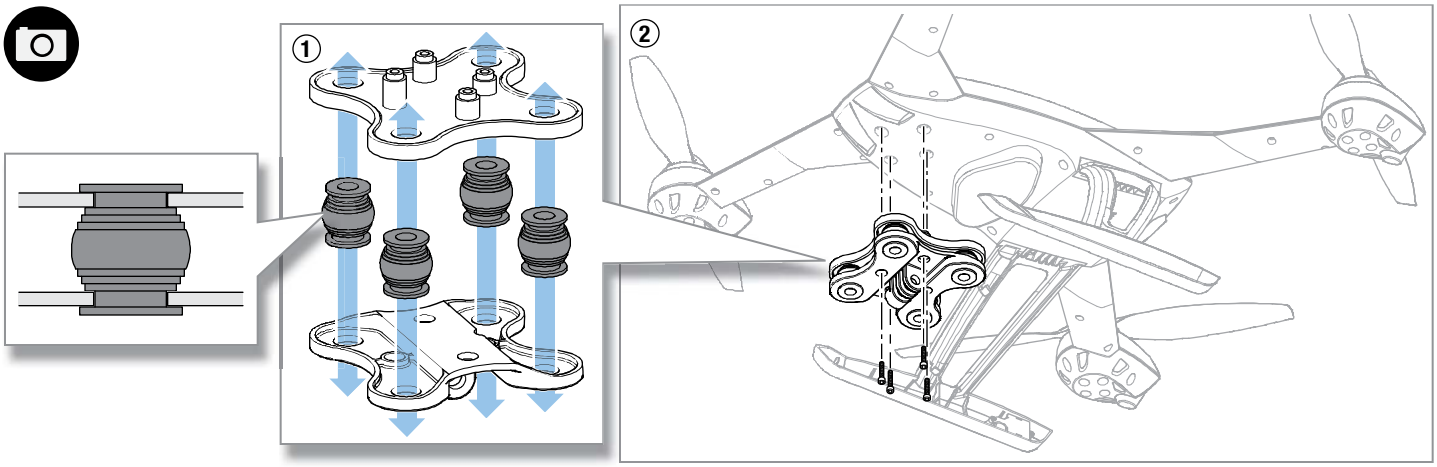

Installing the Included Camera Frame to the Isolation Mount

** Camera not included*

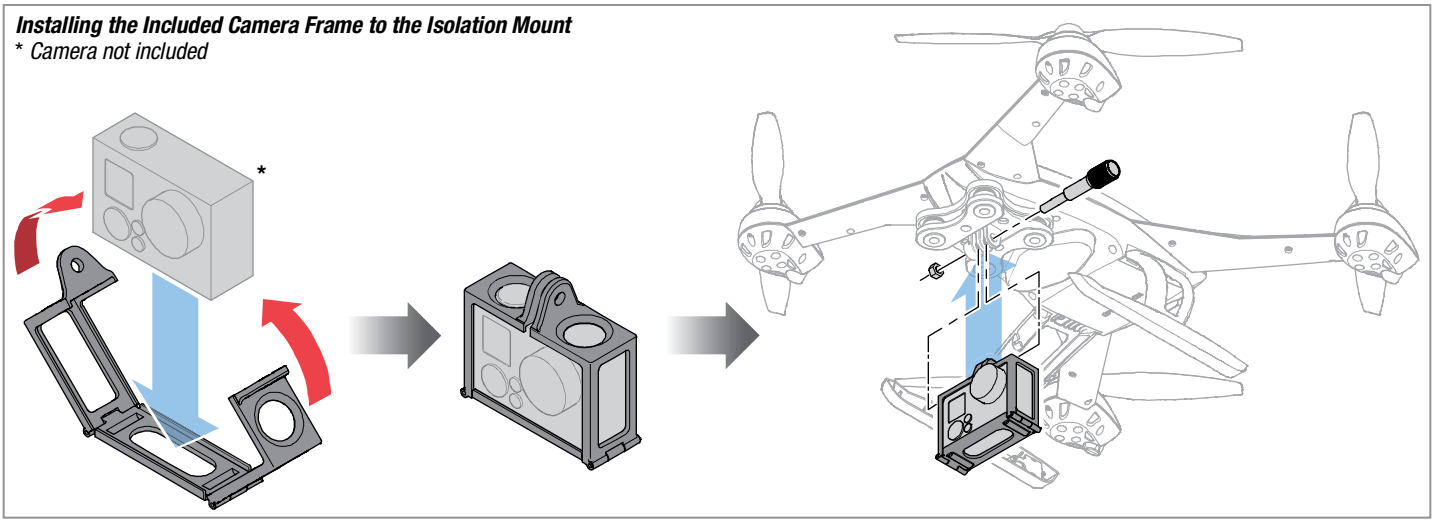

Transmitter Setup (BNF)

⚠ **CAUTION:** When using a Futaba transmitter with a Spektrum DSM module, you must reverse the throttle channel and rebind. Refer to your Spektrum module manual for binding and failsafe instructions. Refer to your Futaba transmitter manual for instructions on reversing the throttle channel.

Transmitter	Model Type	Reverse Setup	Throttle Cut Setup	Mode Setup	Switch Positions	Throttle Cut	Return Home	Dual Rate Switch	High Rate	Low Rate
DX4e (New)* w/3-position switch	N/A	N/A	N/A	N/A	Position 0 = **SMART Mode** Position 1 = **Stability Mode** Position 2 = **Agility Mode**	Lower throttle trim until motors stop turning	Press and Hold TRAINER/BIND Release to EXIT	Rate	100% fixed	70% fixed
DX5e (New)* w/3-position switch	N/A	N/A	N/A	N/A	Position 0 = **SMART Mode** Position 1 = **Stability Mode** Position 2 = **Agility Mode**	Lower throttle trim until motors stop turning	Press and Hold TRAINER/BIND Release to EXIT	Rate	100% fixed	70% fixed
DX6i	Acro	THRO-N ELEV-N GEAR-R AILE-N RUDD-N FLAP-N	ACT	Travel Adj: GEAR POS (0) GEAR: ↑100%; GEAR/F MODE POS (1) GEAR: ↓40% FLAPS: Norm ←↑100; LAND ↓100 MIX 1: ACT; GEAR → GEAR ACT RATE D 0%; U + 100% SW MIX TRIM INH	GEAR 0; Mix 0 = **SMART Mode** GEAR 1; Mix 0 = **Stability Mode** GEAR 1; Mix 1 = **Agility Mode**	Press throttle cut	FLAP Position 0 = OFF FLAP Position 2 = Return Home	ELEV-AIL D/R	100%	70%
DX7/7SE	Acro	FLAP-R (6) Others-N	N/A	Travel Adj: GEAR (0)↑100%; GEAR (1) ↓40% MIX 1: FLAP → Gear OFF/ON RATE → -50% 0% SW: MIX OFFSET: 0	GEAR (0); Mix (0) = **SMART Mode** GEAR (1); Mix (0) = **Stability Mode** GEAR (1); Mix (1) = **Agility Mode**	Lower throttle trim until motors stop turning	FLAP Pos 0 = OFF FLAP Pos 1 = Return Home	ELEV-AIL D/R	100%	70%
DX7S	Acro	AUX1-R Others-N	Set To: Trainer	Switch Select: Move Gear to F MODE (F MODE:GEAR) Leave FLAPS as AUX1 Set All Others to INH MIX 1: GER > GER RATE: 0% -100% OFFSET: 0%; TRIM: INH; SW: Mix0	F MODE (0) = **SMART Mode** F MODE (1) = **Stability Mode** F MODE (1); HOLD (1) = **Agility Mode**	Press Trainer	FLAP Pos 0 = OFF FLAP Pos 2 = Return Home	ELEV-AIL D/R	100%	70%
DX8	Acro	AUX1-R Others-N	Set To: Trainer	Switch Select: F-Mode to Gear; Flap to Aux 1 All Others to INH	F MODE (0) = **SMART Mode** F MODE (1) = **Stability Mode** F MODE (2) = **Agility Mode**	Press Trainer/ Bind	FLAP Pos 0 = OFF FLAP Pos 2 = Return Home	ELEV-AIL D/R	100%	70%
DX9/DX18	Acro	AUX1-R Others-N	Set To: I (BIND)	Channel Assign: NEXT 1-4: N/A 5 Gear: B 6 AUX1: D 7 AUX2: I 8-10: INH	B (0) = **SMART Mode** B (1) = **Stability Mode** B (2) = **Agility Mode**	Press I (BIND)	D (FLAP) Pos 0 = OFF D (FLAP) Pos 2 = Return Home	ELEV-AIL D/R	100%	70%

* Old versions of the DX4e and DX5e (with 2-position channel 5 switches) are **not** recommended for the 350 QX. Only **Smart Mode** and **Agility Mode** will be available with GPS On.

Transmitter Control Layout (RTF)

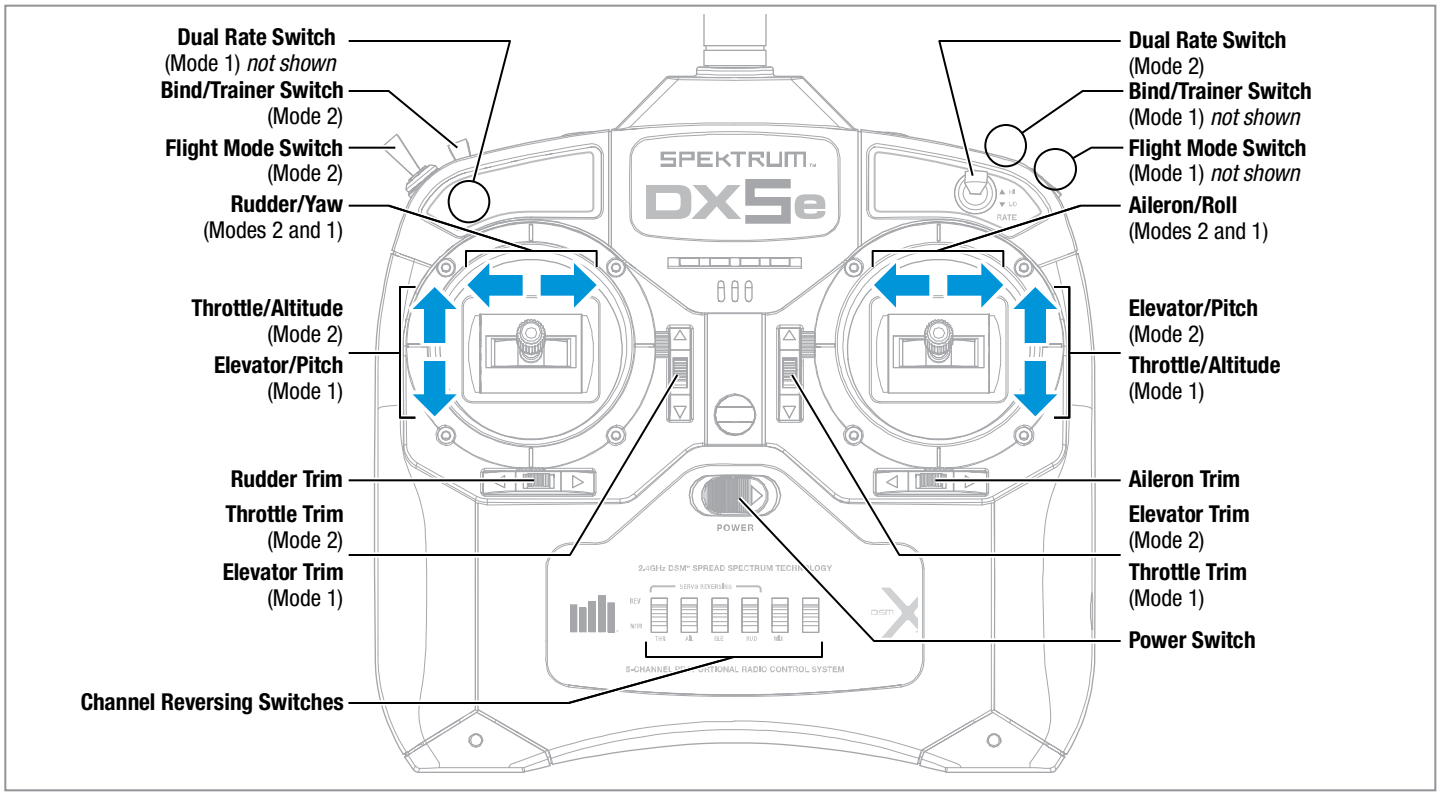

Connecting the Flight Battery

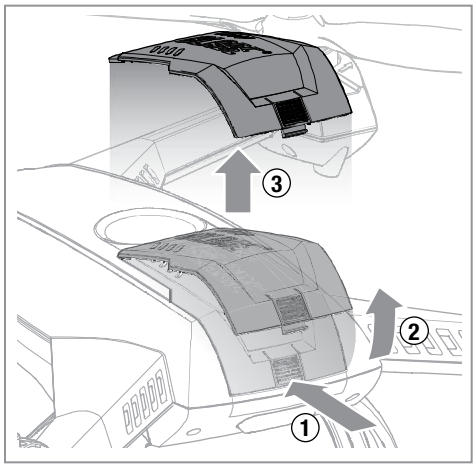

Remove the battery cover

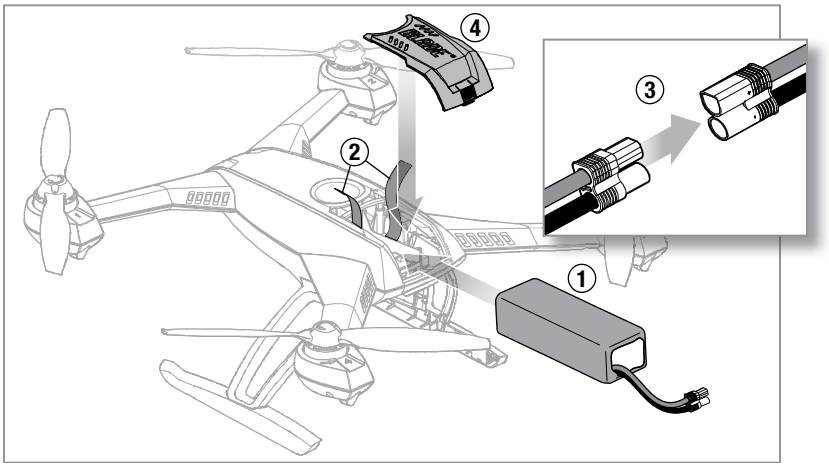

Install the battery

Binding

- If you purchased the ready-to-fly (RTF) model, the transmitter is bound to the model at the factory. If for any reason the model needs to be re-bound, follow the directions for the Bind-N-Fly® (BNF) version below.

BNF BIND-N-FLY®

To bind or re-bind your 350 QX to your chosen DSM2/DSMX transmitter, please follow the directions below along with the binding instructions included with your transmitter:

The Binding Process
1. With the transmitter and quadcopter powered off, connect the battery to the 350 QX.
2. With the 350 QX on a level surface, turn on the power switch and allow the quadcopter to initialize.
3. Wait until the blue LED on the quadcopter flashes rapidly, signaling the quadcopter is initialized and ready to bind.
4. Ensure throttle is in the low position and throttle trim is at neutral.
5. Hold the control sticks in the desired bind position (see illustrations) and press/pull the bind button/switch, then power on the transmitter.
6. Refer to the Flying LED Codes table to ensure the aircraft is bound correctly.

IMPORTANT: Do not attempt to bind with more than one bind code. Binding with more than one bind code will only allow the aircraft to bind normally.

Unless binding with a bind code, the elevator and aileron inputs (including trim) must be neutral during binding. If you are attempting a normal bind with any input other than neutral, the aircraft will emit a constant, rapid beeping sound.

If your 350 QX emits a constant beeping sound after binding (**Smart** or **Agility Mode** only):

1. Ensure all trims are neutral.
2. Slowly move the elevator stick back and forth (close to center) and listen for the beeping to stop or hesitate. Take note of the direction you are moving the stick when the change of tone happens.
3. If the tone never changes with elevator movement, slowly move the aileron stick back and forth (close to center) and listen for the beeping to stop or hesitate. Take note of the direction you are moving the stick when the change of tone happens.
4. Input trim in the direction that caused the change in tone until the beeping stops.

In the event you cannot find an input that stops the tones:

1. Apply 1 click of elevator trim in either direction and then slowly move the aileron stick close to center.
2. Continue to add 1 click at a time of elevator trim, up to 5 trim steps off center up or down, and move the aileron stick until you find the point that makes the tones stop.
3. Add aileron trim in the direction you moved the stick to make the tones stop.

Entering Bind Mode

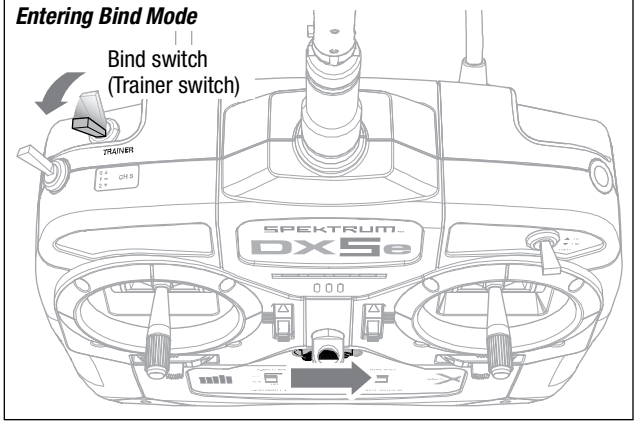

Normal Bind

Transmitter Bind Codes *Mode 2 shown*

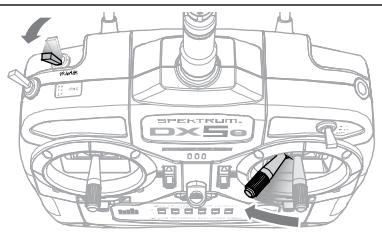

Bind with GPS enabled — Roll left

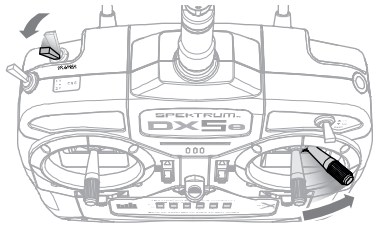

Bind with GPS disabled — Roll right

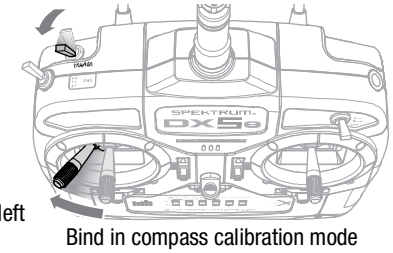

Yaw left — Bind in compass calibration mode

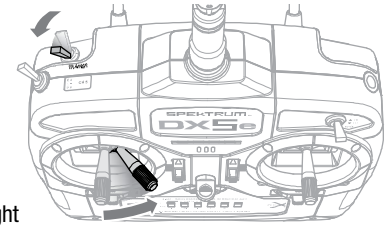

Yaw right — Bind in pressure calibration mode

Flight Mode Switches

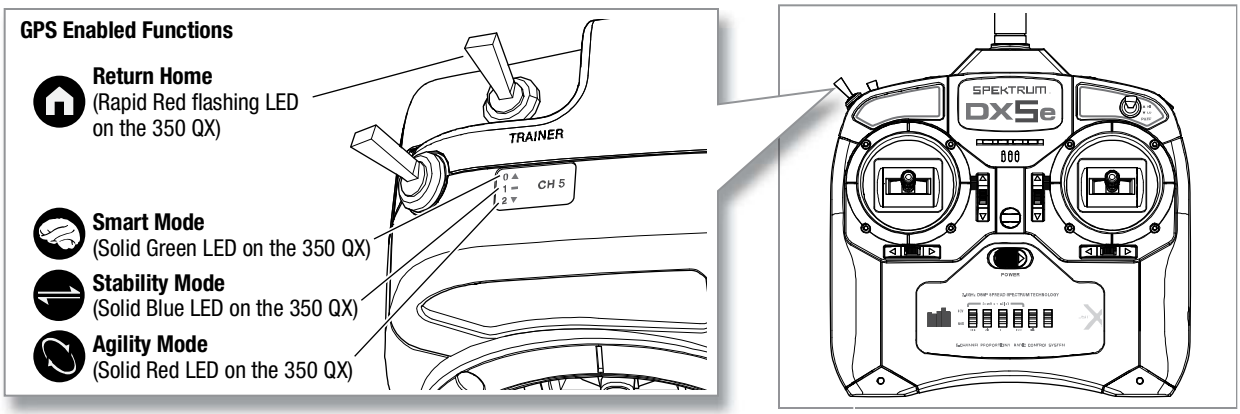

Flight Modes Explained

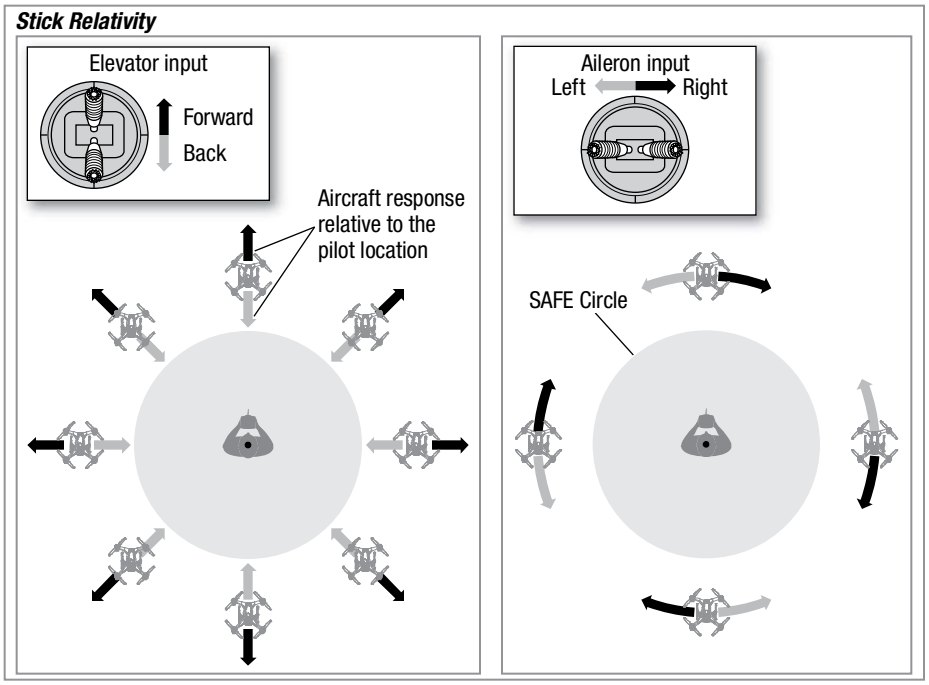

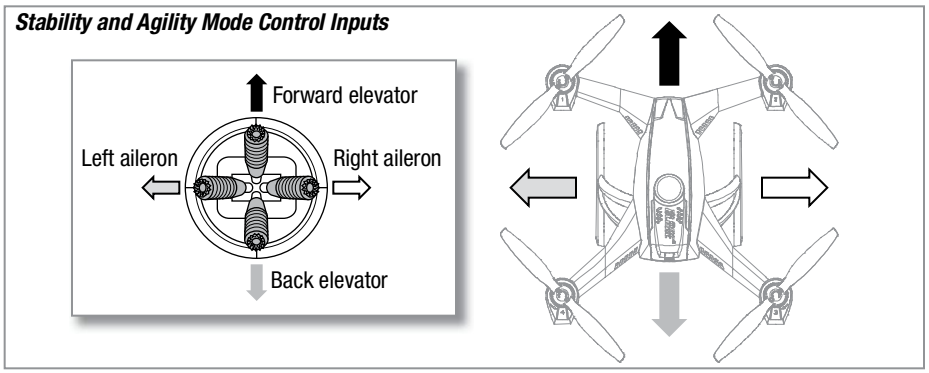

Flight Mode 0– **Smart Mode (Default)**
(Solid Green Indicator LED)

Stick Relativity– While in **Smart Mode,** the path of the aircraft will always follow the control stick input direction relative to the SAFE Circle, regardless of the direction the nose of the aircraft is pointing.

- *SAFE Circle*™– In most scenarios, the quad will not enter the SAFE Circle.
- *Position Hold*– The aircraft will hold its position when elevator and aileron inputs are at neutral.
- *Self-Leveling*– Brings the 350 QX to a level attitude when the elevator and aileron inputs are at neutral.
- *Altitude Command*– Altitude is relative to throttle stick position.

Flight Mode 1– **Stability Mode**
(Solid Blue Indicator LED)

- *Self-Leveling*– Brings the 350 QX to a level attitude when the elevator and aileron inputs are at neutral.
- *Position Hold*– The 350 QX uses GPS to hold a given location when this function is activated. If GPS is enabled and has a solid lock, the aircraft will hold its position when elevator or aileron inputs are at neutral.
- *Throttle provides proportional thrust*– The throttle responds directly to the throttle input, giving the pilot direct control over hovering as well as ascent and descent rates.

Flight Mode 2– **Agility Mode**
(Solid Red Indicator LED)

- *Aerobatic*– Capable of flips and rolls
- *Throttle provides proportional thrust*– The throttle responds directly to the throttle input, giving the pilot direct control over hovering and ascent and descent rates.

The Blade 350 QX flies very differently in the different flight modes. Beginners should use **Smart Mode** to start and progress slowly into **Stability Mode.** When flying in **Smart Mode,** the quadcopter follows stick input based on the set pilot location. When flying in **Stability Mode,** the quadcopter follows stick inputs based on the orientation of the aircraft. The transition from **Smart Mode** to **Stability Mode** can be a challenge for new flyers because the pilot will need to learn how to interpret the aircraft's orientation.

This aircraft is extremely sensitive to control inputs in **Agility Mode** and has NO self leveling. We recommend you fly at low rate settings for the first few flights until you are familiar with its response. For pilots new to quadcopters and helicopters, familiarize yourself with the Blade 350 QX in **Smart Mode** and at low rate.

As you become more familiar with the quadcopter's response, adjust the rates and expo to suit your flying style (if using a computer radio).

NOTICE: Do not attempt to fly your 350 QX in **Stability Mode** or **Agility Mode** until you have familiarized yourself with the operation of the aircraft in **Smart Mode** and read and understand the descriptions of the other flight modes.

Audible Alerts and LED Codes

The motors will Beep under the following conditions:

- Any time the props stop spinning after they have been initialized.
- After 30 seconds of no throttle input (waiting armed on the ground).

Audible Alerts

Event	Audible Alert
ESC power on	one short beep
Successful initialization	many continuous tones with increasing frequency
RC signal detected after start	one long tone
Bind detected	one long tone
Bind accepted (3 seconds after detected)	one long tone
Thrust stick in correct position for motor start	low, med, high (happy tone)
Cannot start motors because of low voltage	high, med, low (sad tone)
Cannot start motors because vehicle is tilted	high, med, low (sad tone)
Enter ESC ID assignment mode	loud high, low — high, low

Initialization Audible Alerts

Event	Audible Alert
Gyro, accelerometer sensor error	High, low, 1 short tone
Compass initialization error	High, low, 2 short tones
Pressure sensor initialization error	High, low, 3 short tones
GPS initialization error	High, low, 4 short tones
ESCs not detected	High, low, 6 short tones
Settings saved (i.e. when changed GPS on/off, etc)	Rapid low, med, high — low, med, high
Trim warning (when in Smart or Agility Mode)	Continuous very short, rapid tone
Low-battery warning	Medium frequency, loud tone (every 3 seconds)
Emergency state warning (also after ESC ID assignment)	Once per second loud medium tone

Startup LED Codes

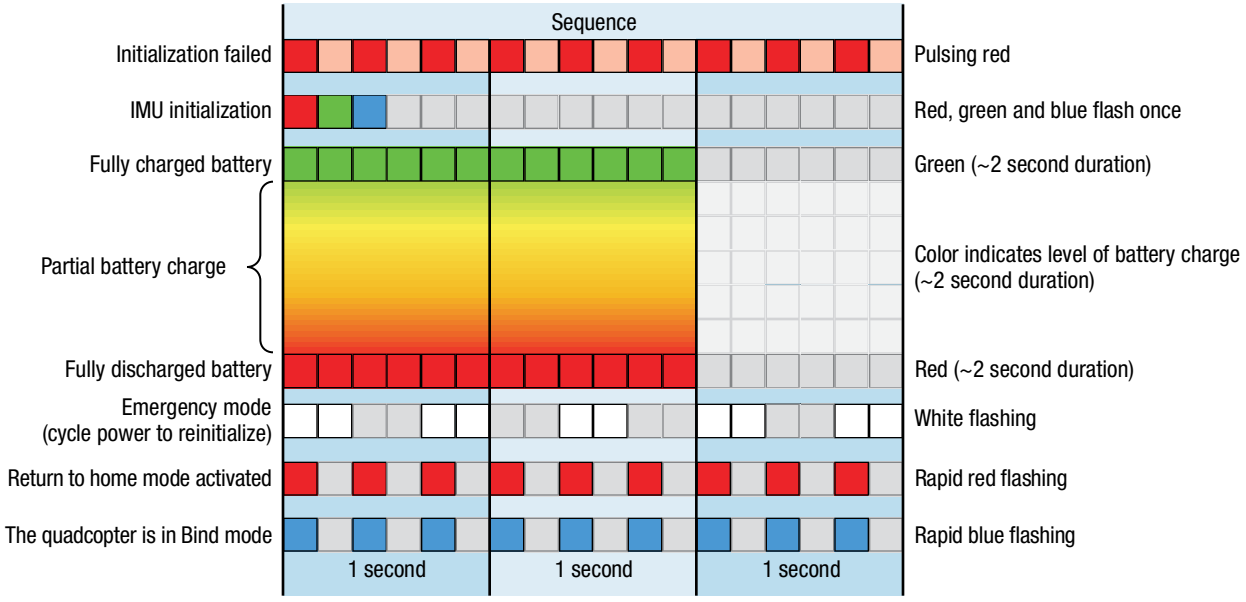

Flying LED Codes

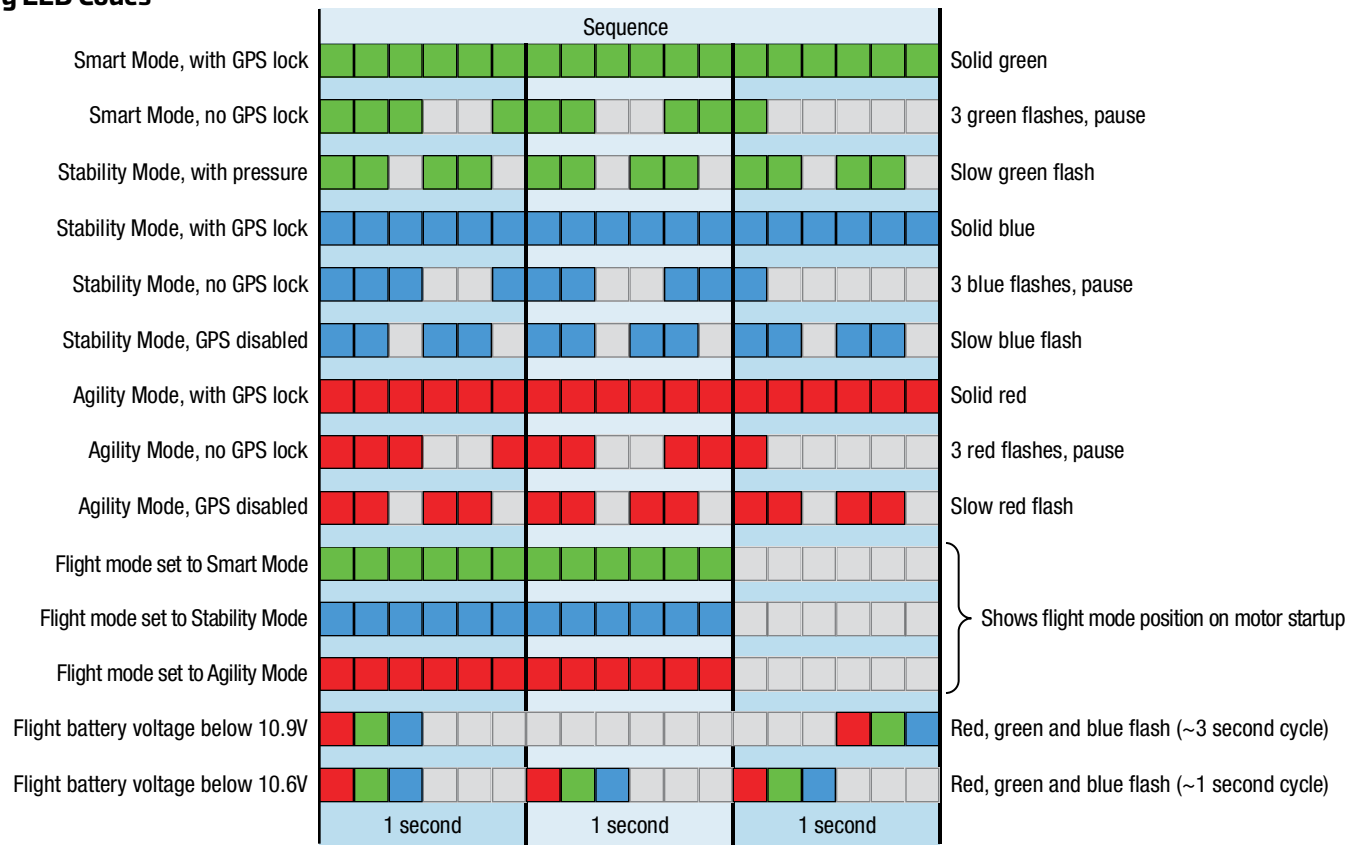

CAUTION: If you see the LED signal for low battery, immediately land your aircraft and recharge the battery.

CAUTION: Do not attempt to use Return Home with a low battery.

Calibration LED Codes

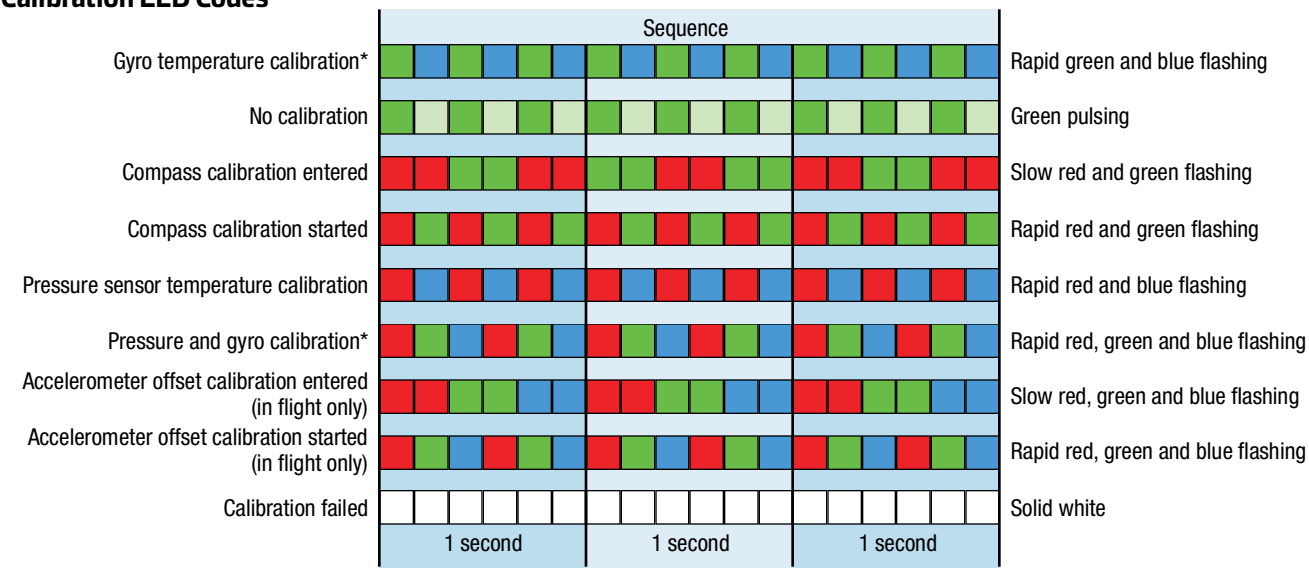

* These items are performed by the manufacturer.

GPS Functionality of the 350 QX

To acquire a reliable GPS signal, it is important the 350 QX has a clear view of the sky. Obstructions that can affect the aircraft's ability to acquire an acceptable signal include:

- Flying close to or around tall/big buildings
- Flying under dense vegetation
- Flying indoors or under a structure

If you lose or cannot acquire a GPS lock and home position, the aircraft will not have Stick Relativity, SAFE Circle, Position Hold or Return Home functions available.

It is not possible to use **Smart Mode** without having GPS enabled. If the 350 QX is initialized without GPS enabled, it will default to **Stability Mode.** The aircraft will still be capable of altitude hold.

If you do not have a GPS signal, try maneuvering the 350 QX by steering with forward elevator and rudder only.

⚠ **CAUTION:** Do not attempt to fly the 350 QX with GPS enabled while indoors or in a location where the GPS signal is known to be poor, as loss of signal could result in a crash.

GPS Functions

(*see the binding section for turning GPS functions ON and OFF*)

With **GPS ON**

- If the 350 QX took off with GPS lock and a home position set, when Return Home mode is activated the quadcopter will fly back to the start position (maintaining altitude along the way), then reduce altitude to land.
- If the 350 QX should lose GPS when Return Home mode is activated, it will land quickly using the barometric pressure sensor to maintain the descent rate.
- If the 350 QX took off without GPS lock, but acquires a GPS signal in flight, it will land slowly using GPS to hold its position and barometric pressure sensor to maintain the descent rate when Return Home mode is activated.
- If the 350 QX loses GPS during landing in Return Home mode, it will increase the rate of descent and land quickly to avoid drift.
- If the 350 QX deviates too far from its intended GPS path when in Return Home mode, it will descend using the barometric pressure sensor to maintain the descent rate. This could happen if the flight control system loses its orientation because of aggressive flight in 3 axis mode.
- Once the 350 QX has landed in Return Home mode it will disarm the motors

With **GPS OFF**

- If Return Home mode is activated, the 350 QX will level off and land quickly using the barometric pressure sensor to maintain the descent rate.
- Once the 350 QX has landed in Return Home mode it will disarm the motors.

GPS Failure

Upon GPS failure, the 350 QX will respond according to the following conditions:

Smart Mode: (rapid Green flashing LED)

If the 350 QX is in this mode and the GPS fails, the quad will default to **Stability Mode.** The aircraft will still use the pressure sensor to maintain altitude and control rate of descent. If GPS is re-acquired, after 5-10 seconds of reliable GPS signal the **Smart Mode** functions are returned to normal

Stability Mode: (long Blue, two short Green flashing LED)

If the 350 QX is in this mode and the GPS fails, it will not switch to **Smart Mode** and will not enter GPS hold, but will otherwise function normally. If GPS is reacquired, after 5-10 seconds of reliable GPS signal the **Stability Mode** functions are returned to normal

Agility Mode: (long Red, two short Green flashing LED)

If the 350 QX is in this mode and the GPS fails, it will not affect flight performance, but it will not be able to switch into **Smart Mode.** It will still be able to switch into **Stability Mode** with the limitations described above.

Loss of Transmitter Signal

If the transmitter signal is lost for any reason, the 350 QX will respond according to the following conditions:

- If the motors are not turning, the 350 QX will disarm.
- If the motors are turning but the 350 QX is not flying, it will turn off the motors and disarm.
- If the 350 QX is flying and has a good GPS lock with a home position set, it will activate the Return Home function upon the loss of the transmitter signal.
- If the compass is not connected or faulty, or if there is no GPS lock, the 350 QX will descend slowly upon the loss of the transmitter signal.
- If the pressure sensor is not working, the 350 QX will reduce power to initiate a controlled descent upon the loss of the transmitter signal.

Flight Guidelines and Warnings

- Always keep aircraft in sight and under control.
- Always keep people and pets at least 35 feet (10 meters) away when the battery is connected.
- Keep children out of the vicinity of this product at all times.
- Always use fully charged batteries.
- Always keep transmitter powered on while aircraft is powered.
- Always remove batteries before disassembly.
- Always keep moving parts clean.
- Always keep parts dry.
- Always let parts cool after use before touching.
- Always remove batteries after use.
- Always have a first aid kit with you.
- Always have an appropriate fire extinguisher with you.
- Never operate aircraft with damaged wiring.
- Never touch moving parts.

The Blade 350 QX has many more features than other Blade quadcopters. Please take the time to read this manual and understand the functions this aircraft contains before flying.

Preparing the 350 QX For Flight

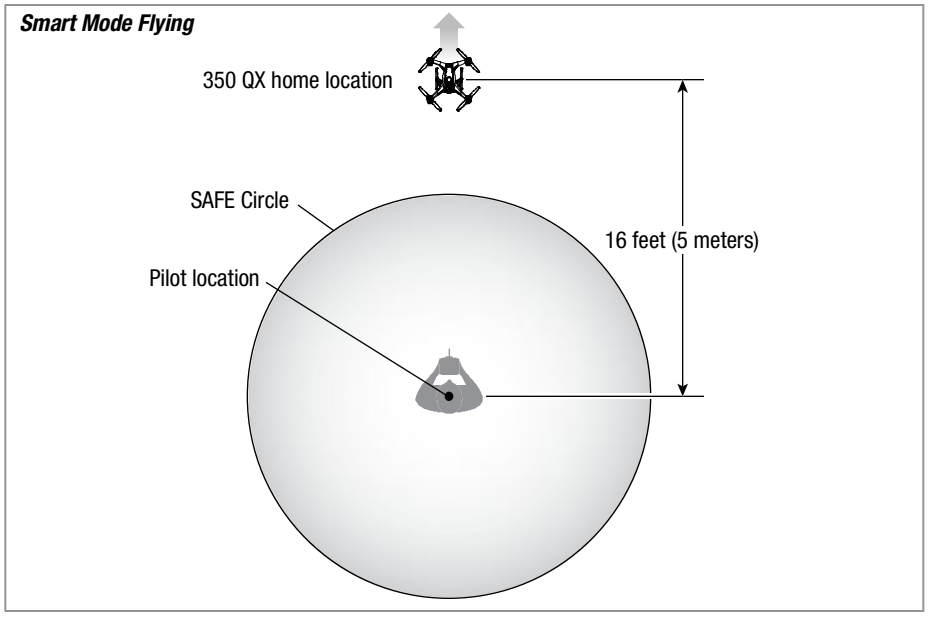

1. Power on the transmitter with the flight mode set to **Smart Mode,** the throttle stick down and the throttle trim at neutral.
2. Install a charged battery, plug it in and close the hatch.
3. With the quad on a level surface, turn on the power switch and allow the 350 QX to initialize.
   If the GPS is enabled, wait for the GPS signal to be acquired, which is indicated by a solid green LED. It may take from 30–90 seconds to acquire a GPS signal.

IMPORTANT: While in **Smart Mode** the motors will not start if a GPS signal has not been acquired.

4. Move the aircraft to the desired home location and orient the aircraft pointed away from the pilot.
5. Step back approximately 16 feet (5 meters) from the home location.
6. When you are prepared to fly, quickly move the rudder stick all the way left and then all the way right. The props will begin to spin. The home position for GPS functions is set and your aircraft is ready to fly.

IMPORTANT: The motors will not start if the transmitter is set to low rate. The dual rate switch must be set to high rate.

Lower the throttle stick and the throttle trim to power off the props after flight.

CAUTION: When the home location is set (**step 6**), the 350 QX must be approximately 16 feet (5 meters) from where the pilot will stand during flight, pointing away from the pilot. If the aircraft is pointed in any other direction, the *SAFE Circle* feature will not function as expected and may result in personal injury or damage to property. Once the aircraft's motors are started, do not change your position.

Flying the 350 QX

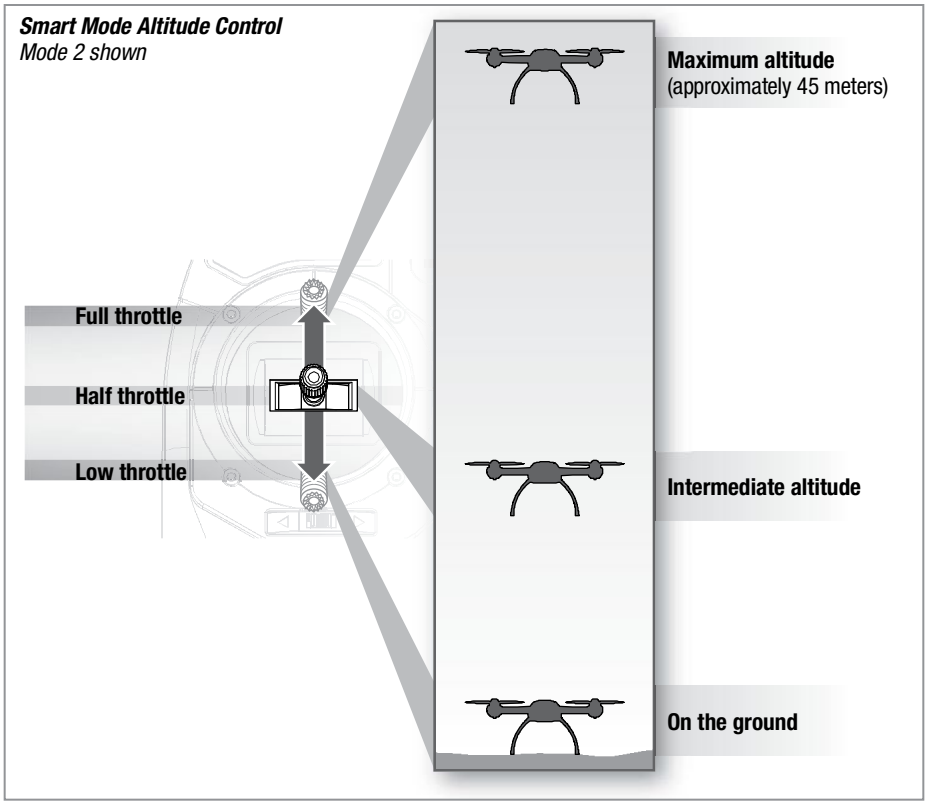

Takeoff

Increase the throttle slightly above low stick (10–15%). The 350 QX altitude in **Smart Mode** corresponds to the throttle position. Low throttle is on the ground, slightly raising the throttle will produce a low hover, and the higher the throttle position, the higher the 350 QX will ascend until it reaches its maximum altitude (approximately 45 meters).

Explore the flight envelope of the 350 QX in **Smart Mode** without fear of losing orientation. See the diagrams in the *Flight Modes Explained* section for more details on the aircraft's function in **Smart Mode.** In **Smart Mode,** the direction the aircraft is pointing does not affect the control, and the aircraft's response relative to you (*the pilot location*) does not change with orientation. **Stability Mode** and **Agility Mode** operate more like a conventional RC helicopter or multicopter.

IMPORTANT: Aggressive flight in **Agility Mode** will significantly reduce flight time.

Landing

To land the 350 QX there are two options:

- Guide the aircraft to where you wish to land and reduce the throttle. Reduce the throttle trim after landing to disarm the motors.
- Activate the Return Home function to return the 350 QX to the assigned home location and land automatically.

CAUTION: Do not activate the **Return Home** function if the 350 QX is showing the low battery indication. *Manually land the aircraft immediately.*

Return Home

- When this feature is activated, the 350 QX will fly back to its assigned home location and land. After landing, the motors may take up to 5 seconds to disarm. If the motors take more than 20+ seconds to disarm, perform the Pressure Sensor Calibration.
- To restart the props after landing in **Return Home,** fully lower the throttle and ensure the throttle trim is neutral, then quickly move the rudder stick fully left and then fully right.

CAUTION: The 350 QX will not recognize the *SAFE Circle* feature when **Return Home** is used. Activating **Return Home** may cause the 350 QX to fly directly over the pilot if the aircraft was flown to a position behind where the pilot was standing when the home position was established.

After Your Flight

1. Turn off the power switch on the 350 QX.
2. Turn off the power to your transmitter.
3. Unplug and remove the battery from the 350 QX.

CAUTION: Always disconnect the Li-Po battery from the aircraft when not flying to avoid over-discharging the battery. Batteries discharged to a voltage below the lowest approved voltage may become damaged, resulting in loss of performance and potential fire when batteries are charged.

Location alert

The motors will Beep under the following conditions:

- At any time the props stop spinning after they have been initialized.
- After 30 seconds of no throttle input (waiting armed on the ground).

This will alert the pilot to the location of the aircraft if it lands in a location with low visibility.

Beeping will continue until the battery can no longer supply enough power to the motors.

If the quadcopter crash lands and one or more motors are stopped by an impact, the quadcopter enters emergency mode. The LED will flash white and the motors will beep loudly.

Activating Return Home

Press and hold.
Releasing the switch will stop the *Return Home* program.

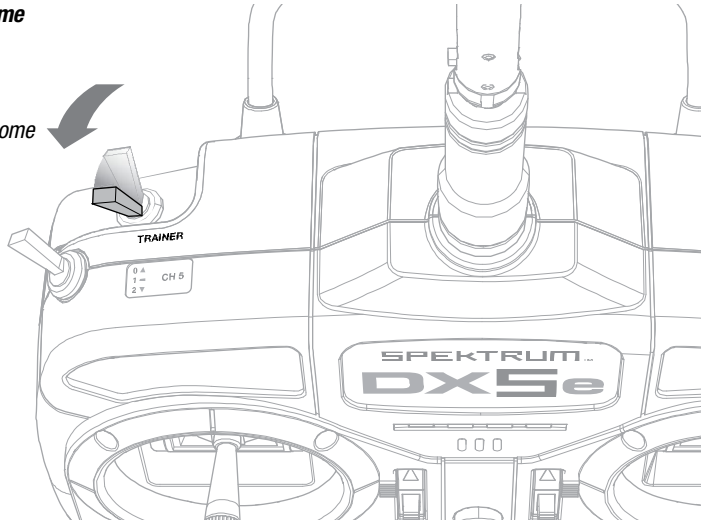

Body Screw Locations

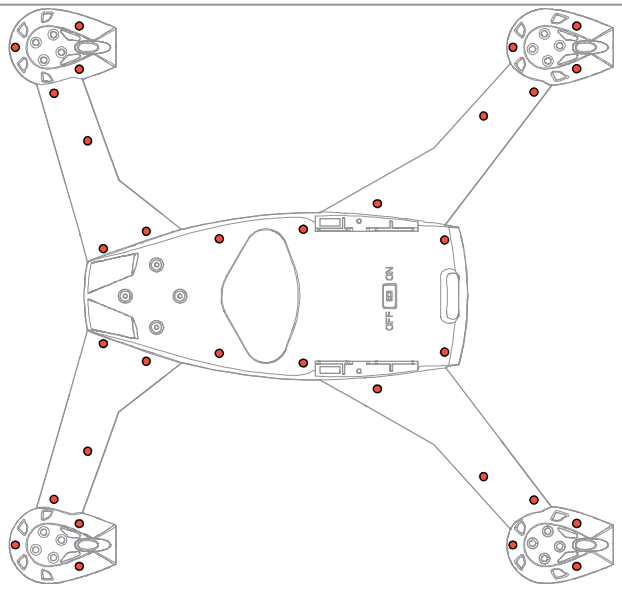

Internal Components

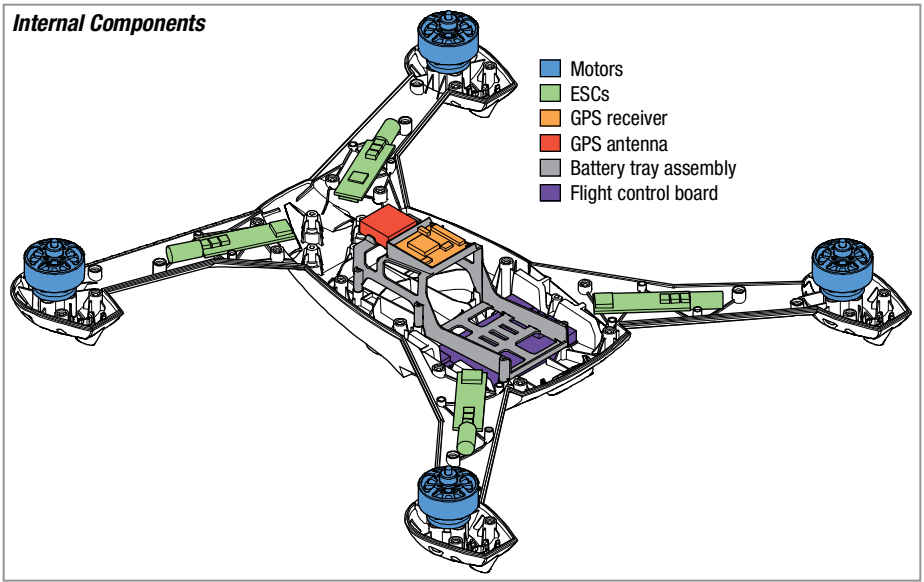

Propeller Direction of Rotation Indicators

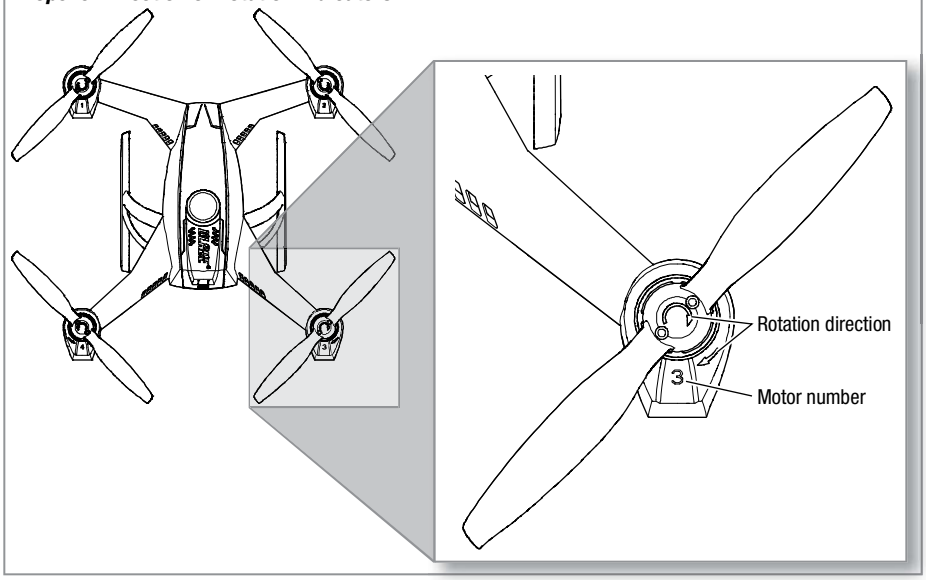

Replacing the body

Disassembly of the old airframe

1. Ensure the battery is disconnected from the quadcopter.
2. Remove the 2 machine screws from each propeller and remove the propellers.
3. Remove the 32 1.5mm hex screws from the bottom of the frame to separate the upper and lower body pieces.
4. Unplug the compass sensor from the flight control board. Remove the landing gear with compass sensor and place it in a safe area away from magnets.

NOTICE: Do not allow the compass sensor to get near a magnet. Any magnet, including those in the 350 QX motors, can damage the compass and cause it to work incorrectly. If the 350 QX is flown with a faulty compass, all GPS functions will be compromised.

5. Unplug the GPS receiver from the flight control board and remove the battery tray assembly.
6. If you are replacing the GPS components, remove the foil from the GPS receiver and unplug the GPS antenna from the GPS receiver.
7. Remove the flight control board from the airframe.
8. Remove the motors and ESCs from the airframe.

Before installing the components into the new airframe, inspect all the components for any obvious damage or burnt smells. Check the motors for smooth bearings and inspect all the propellers for chips, burrs or cracks. Replace any parts in question.

Installing components in the new airframe

1. Install the motors and ESCs, making sure to match the wire colors on the connectors.
2. Install the flight control board.
3. Install the tray assembly.
4. Install the GPS receiver and GPS antenna and plug the cables into their corresponding sockets.
5. Assign the motors and ESCs according to the *ESC and Motor Assignment Procedure.*
6. Install the landing gear and connect the compass to the flight control board. If you replaced the compass or believe that it may have been impaired by a magnetic field, you will need to perform the compass calibration procedure.
7. Mount the top of the airframe.
8. Install the propellers, paying attention to the direction of rotation as indicated by the arrows molded in the frame and on the propellers for each motor.

Compass Calibration

The Flight Controller on the 350 QX has automatic magnetic declination calibration, so you will not have to worry about looking up the magnetic declination at your location and changing settings on your 350 QX to get accurate compass measurements. It is possible, however, that your compass may need to be calibrated if it is exposed to strong magnetic fields.

Compass calibration procedure:

1. Go to an open space outdoors away from metal. Take a conventional compass with you to ensure you know the direction of north.
2. Ensure your transmitter is off and then connect a flight battery to the 350 QX. Power the aircraft on. Wait five seconds and then the blue LED will begin flashing rapidly, signaling the aircraft is initialized and ready to bind.
3. Once the blue light begins flashing, bind with yaw stick left. The 350 QX LED will slowly flash between red and green for 5 seconds.
4. Put the 350 QX flat in your hands and face north. After 5 seconds of slow flashing the quad will start flashing rapidly. The quad is now collecting data to be used for the calibration.
5. Slowly rotate the quad 360 degrees about the east-west axis ("flip" the aircraft either forward or backward) until it is flat in your hands again.
6. Continue facing north and yaw the quad 45 degrees left so the quad is now facing north-west.
7. Slowly rotate the quad 360 degrees about the east-west axis, ("flip" the aircraft diagonally either direction) until it is flat in your hands again.
8. Continue facing north and yaw the quad 45 degrees left so the quad is now facing west.
9. Slowly rotate the quad 360 degrees about the east-west axis ("flip" the quad sideways either direction) until it is flat in your hands again.
10. Continue facing north and yaw the quad 45 degrees left so the quad is now facing south-west.
11. Slowly rotate the quad 360 degrees about the east-west axis ("flip" the aircraft diagonally either direction) until it is flat in your hands again.

You have 30 seconds to complete the procedure. The 350 QX should still be blinking rapidly when you finish. Hold the aircraft still until it stops blinking rapidly. If successful, the 350 QX will beep a positive confirmation and then restart itself. If unsuccessful, the 350 QX displays the failed calibration code, a solid white LED. If the 350 QX displays this error code, power off the aircraft and then begin the calibration procedure again.

Compass Calibration Steps

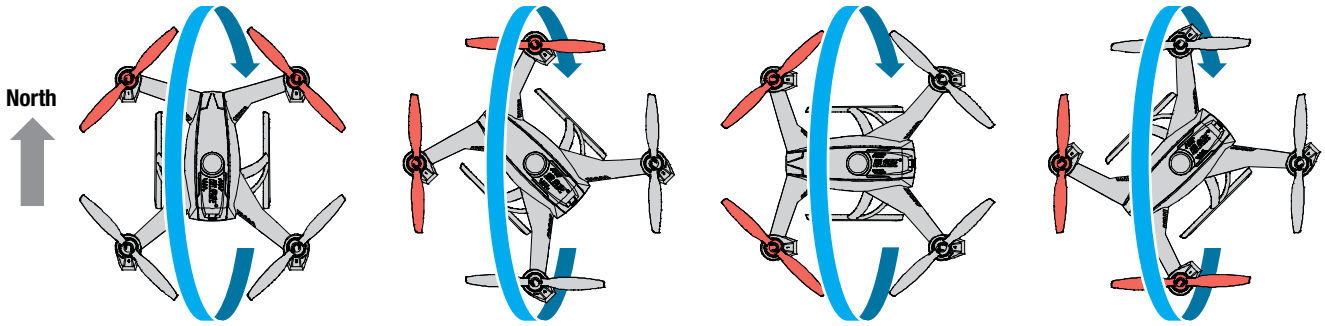

Pressure Sensor Calibration

The pressure sensor is calibrated at the factory on the 350 QX. Recalibration should only be necessary if you replace the sensor.

1. Place the 350 QX in a cold area. Allow it to remain in the cold for 30 minutes or more.
2. Bring the 350 QX out of the cold and into a warm area. The greater the difference in temperature between the cold and warm areas, the more accurate the calibration will be.
3. Ensure your transmitter is off and then connect a flight battery to the 350 QX and power the aircraft on. Wait five seconds and then the blue LED will begin flashing rapidly, signaling the aircraft is initialized and ready to bind.
4. Once the blue light begins flashing, bind with yaw stick right. The 350 QX will blink red and blue rapidly. Leave the aircraft and transmitter powered on and allow the aircraft to warm up for 10 minutes. Do not move the aircraft during this time.
5. After 10 minutes the motors on the aircraft will beep to indicate the calibration is complete. Power off the aircraft and then your transmitter.

If the 350 QX displays the failed calibration code, power off the aircraft and then begin the pressure calibration procedure again.

Accelerometer Calibration

To calibrate the accelerometer, the quadcopter needs to fly for 20 seconds while being level. This allows the accelerometer readings to be averaged and stored in memory.

Use the following procedure to calibrate the accelerometer:

1. Power on the quadcopter with the transmitter off to enter bind mode.
2. Turn on the transmitter while holding the elevator stick back and pressing the bind switch.
3. Set the flight mode switch to Stability Mode or Smart Mode. The quadcopter will fly in Stability Mode no matter which position is selected.
4. Start the motors. Fly the quadcopter off the ground. The quadcopter LED will flash slowly (red, green, blue).
5. Use trims to adjust roll/pitch so the quadcopter does not drift left/right and forward/back.
6. Activate the accelerometer calibration mode by changing the flight mode switch into Agility Mode. The vehicle will still fly in Stability Mode. The LED will start flashing quickly (red, green, blue).
7. Fly steadily for 10–30 seconds. The LED will flash slowly when data collection is done.
8. Land the quadcopter and stop the propellers by lowering the throttle and throttle trim.

IMPORTANT: The calibrated values are not yet permanently stored. Do not turn off the quadcopter.

9. Center the trims on the transmitter. Start the motors and verify the quadcopter flies without drifting.
10. Land the quadcopter and stop the motors by lowering the throttle and throttle trim.
11. Save the calibration by moving the rudder stick quickly left, right, left, right. Values are saved when you hear a rapid triple tone twice.
12. Turn off the quadcopter.
13. Confirm the calibration by powering up the quadcopter and performing a test flight. If the calibration is not correct, start the calibration procedure again.

ESC and Motor Assignment Procedure

Motor Numbers

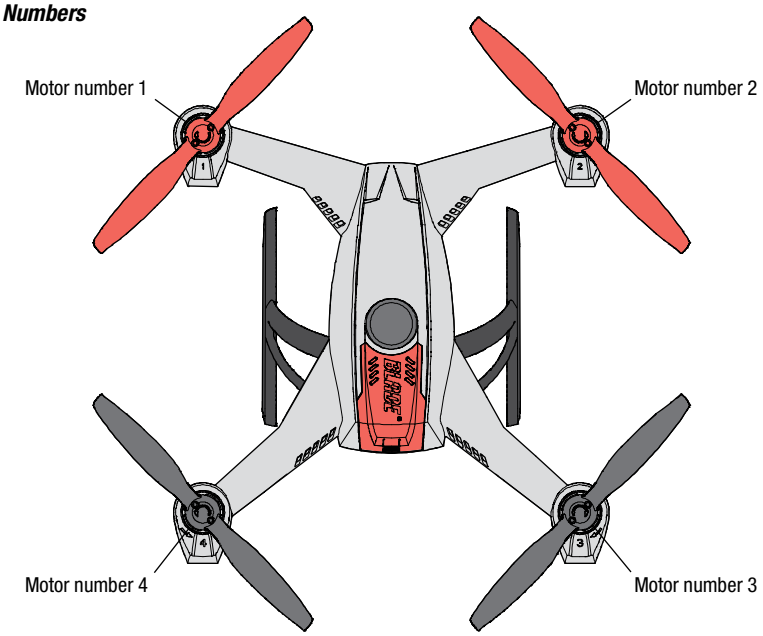

1. Begin with the transmitter off and connect a flight battery to the 350 QX.
2. Power on the quadcopter on a level surface and wait for the rapid blue flashing LED to indicate the aircraft has entered bind mode.
3. With the throttle stick in the full throttle position, press/pull the bind button/switch and power on your transmitter. The quadcopter will acknowledge the assignment mode with a loud high, then low tone. If your transmitter is equipped with a high throttle warning at startup, it is necessary to disable this alarm prior to completing this step. After the replacement procedure is complete, re-activate the high throttle warning in your transmitter.
4. The motor number and prop direction are molded in the top of the body. The motors will give an audible “beep” to indicate which motor to calibrate. When the motors beep 1 time, spin motor 1 by hand. The motor will respond with the same number of tones upon successful assignment.
5. When the motors beep 2 times, spin motor 2 by hand.
6. When the motors beep 3 times, spin motor 3 by hand.
7. When the motors beep 4 times, spin motor 4 by hand.

When the assignment is successful, the quadcopter enters emergency mode. Restart the quadcopter.

Troubleshooting

Problem	Possible Cause	Solution
350 QX will not initialize	The quadcopter was moved during initialization	Re-arm the aircraft, being cautious to avoid any movement during initialization
	Throttle trim is not in the correct position	The trim may need to be adjusted a click above or below center
GPS will not lock	Heavy overcast	Wait for lighter cloud cover and re-lock or disable GPS
	Solar flares	Wait for disturbance to subside or disable GPS
	Aircraft is indoors	Disable GPS
	Objects blocking clear access to the sky (under a metal cover, inside a car, tall buildings, etc...)	Move aircraft to a clear area
	Video transmitter nearby	Re-position or remove video transmitter
GPS has reduced resolution	Raised threat level by the U.S. government	Wait for threat level to be reduced or disable GPS
	The GPS antenna coaxial cable is nicked, cut, or otherwise damaged	Replace the GPS antenna
GPS functions not operating properly	The compass has been exposed to a magnet	Move the aircraft away from the magnetic source. In worst case scenario, the compass may need to be replaced
	The GPS antenna coaxial cable is nicked, cut, or otherwise damaged	Replace the GPS antenna
	The aircraft is behaving erratically	Rebind the aircraft with the GPS function off
	Aggressive flight	Fly level for a few seconds before flipping into other modes
Motors will not start in Smart Mode	Rate mode switch set to low	Set transmitter dual rate switch to hi
	GPS signal is not aquired	Ensure a GPS signal is aquired
	Rudder trim not centered	Center the rudder trim
Motors will not start in Stability/Agility Mode	Rate mode switch set to low	Set transmitter dual rate switch to hi
	Rudder trim not centered	Center the rudder trim
Blades take a long period of time to shut off after completing return to home	Pressure calibration is needed	Refer to the Pressure Sensor Calibration section of this manual
The quadcopter has trouble finding the home position and the props will not shut off after returning home	Accelerometer calibration is needed	Refer to the Accelerometer Calibration section of this manual

Limited Warranty

What this Warranty Covers

Horizon Hobby, Inc., (Horizon) warrants to the original purchaser that the product purchased (the "Product") will be free from defects in materials and workmanship at the date of purchase.

What is Not Covered

This warranty is not transferable and does not cover (i) cosmetic damage, (ii) damage due to acts of God, accident, misuse, abuse, negligence, commercial use, or due to improper use, installation, operation or maintenance, (iii) modification of or to any part of the Product, (iv) attempted service by anyone other than a Horizon Hobby authorized service center, (v) Product not purchased from an authorized Horizon dealer, or (vi) Product not compliant with applicable technical regulations.

OTHER THAN THE EXPRESS WARRANTY ABOVE, HORIZON MAKES NO OTHER WARRANTY OR REPRESENTATION, AND HEREBY DISCLAIMS ANY AND ALL IMPLIED WARRANTIES, INCLUDING, WITHOUT LIMITATION, THE IMPLIED WARRANTIES OF NON-INFRINGEMENT, MERCHANTABILITY AND FITNESS FOR A PARTICULAR PURPOSE. THE PURCHASER ACKNOWLEDGES THAT THEY ALONE HAVE DETERMINED THAT THE PRODUCT WILL SUITABLY MEET THE REQUIREMENTS OF THE PURCHASER'S INTENDED USE.

Purchaser's Remedy

Horizon's sole obligation and purchaser's sole and exclusive remedy shall be that Horizon will, at its option, either (i) service, or (ii) replace, any Product determined by Horizon to be defective. Horizon reserves the right to inspect any and all Product(s) involved in a warranty claim. Service or replacement decisions are at the sole discretion of Horizon. Proof of purchase is required for all warranty claims. SERVICE OR REPLACEMENT AS PROVIDED UNDER THIS WARRANTY IS THE PURCHASER'S SOLE AND EXCLUSIVE REMEDY.

Limitation of Liability

HORIZON SHALL NOT BE LIABLE FOR SPECIAL, INDIRECT, INCIDENTAL OR CONSEQUENTIAL DAMAGES, LOSS OF PROFITS OR PRODUCTION OR COMMERCIAL LOSS IN ANY WAY, REGARDLESS OF WHETHER SUCH CLAIM IS BASED IN CONTRACT, WARRANTY, TORT, NEGLIGENCE, STRICT LIABILITY OR ANY OTHER THEORY OF LIABILITY, EVEN IF HORIZON HAS BEEN ADVISED OF THE POSSIBILITY OF SUCH DAMAGES. Further, in no event shall the liability of Horizon exceed the individual price of the Product on which liability is asserted. As Horizon has no control over use, setup, final assembly, modification or misuse, no liability shall be assumed nor accepted for any resulting damage or injury. By the act of use, setup or assembly, the user accepts all resulting liability. If you as the purchaser or user are not prepared to accept the liability associated with the use of the Product, purchaser is advised to return the Product immediately in new and unused condition to the place of purchase.

Law

These terms are governed by Illinois law (without regard to conflict of law principals). This warranty gives you specific legal rights, and you may also have other rights which vary from state to state. Horizon reserves the right to change or modify this warranty at any time without notice.

WARRANTY SERVICES

Questions, Assistance, and Services

Your local hobby store and/or place of purchase cannot provide warranty support or service. Once assembly, setup or use of the Product has been started, you must contact your local distributor or Horizon directly. This will enable Horizon to better answer your questions and service you in the event that you may need any assistance. For questions or assistance, please visit our website at www.horizonhobby.com, submit a Product Support Inquiry, or call the toll free telephone number referenced in the Warranty and Service Contact Information section to speak with a Product Support representative.

Inspection or Services

If this Product needs to be inspected or serviced and is compliant in the country you live and use the Product in, please use the Horizon Online Service Request submission process found on our website or call Horizon to obtain a Return Merchandise Authorization (RMA) number. Pack the Product securely using a shipping carton. Please note that original boxes may be included, but are not designed to withstand the rigors of shipping without additional protection. Ship via a carrier that provides tracking and insurance for lost or damaged parcels, as Horizon is not responsible for merchandise until it arrives and is accepted at our facility. An Online Service Request is available at http://www.horizonhobby.com/content/_service-center_render-service-center. If you do not have internet access, please contact Horizon Product Support to obtain a RMA number along with instructions for submitting your product for service. When calling Horizon, you will be asked to provide your complete name, street address, email address and phone number where you can be reached during business hours. When sending product into Horizon, please include your RMA number, a list of the included items, and a brief summary of the problem. A copy of your original sales receipt must be included for warranty consideration. Be sure your name, address, and RMA number are clearly written on the outside of the shipping carton.

NOTICE: Do not ship Li-Po batteries to Horizon. If you have any issue with a Li-Po battery, please contact the appropriate Horizon Product Support office.

Warranty Requirements

For Warranty consideration, you must include your original sales receipt verifying the proof-of-purchase date. Provided warranty conditions have been met, your Product will be serviced or replaced free of charge. Service or replacement decisions are at the sole discretion of Horizon.

Non-Warranty Service

Should your service not be covered by warranty, service will be completed and payment will be required without notification or estimate of the expense unless the expense exceeds 50% of the retail purchase cost. By submitting the item for service you are agreeing to payment of the service without notification. Service estimates are available upon request. You must include this request with your item submitted for service. Non-warranty service estimates will be billed a minimum of ½ hour of labor. In addition you will be billed for return freight. Horizon accepts money orders and cashier's checks, as well as Visa, MasterCard, American Express, and Discover cards. By submitting any item to Horizon for service, you are agreeing to Horizon's Terms and Conditions found on our website http://www.horizonhobby.com/content/_service-center_render-service-center.

ATTENTION: Horizon service is limited to Product compliant in the country of use and ownership. If received, a non-compliant Product will not be serviced. Further, the sender will be responsible for arranging return shipment of the un-serviced Product, through a carrier of the sender's choice and at the sender's expense. Horizon will hold non-compliant Product for a period of 60 days from notification, after which it will be discarded.

Warranty and Service Contact Information

Country of Purchase	Horizon Hobby	Contact Information	Address
United States of America	Horizon Service Center (Repairs and Repair Requests)	servicecenter.horizonhobby.com/RequestForm/	4105 Fieldstone Rd Champaign, Illinois, 61822 USA
	Horizon Product Support (Product Technical Assistance)	www.quickbase.com/db/bghj7ey8c?a=GenNewRecord 888-959-2304	
	Sales	sales@horizonhobby.com 888-959-2304	
United Kingdom	Service/Parts/Sales: Horizon Hobby Limited	sales@horizonhobby.co.uk +44 (0) 1279 641 097	Units 1–4 , Ployters Rd, Staple Tye Harlow, Essex, CM18 7NS, United Kingdom
Germany	Horizon Technischer Service Sales: Horizon Hobby GmbH	service@horizonhobby.de +49 (0) 4121 2655 100	Christian-Junge-Straße 1 25337 Elmshorn, Germany
France	Service/Parts/Sales: Horizon Hobby SAS	infofrance@horizonhobby.com +33 (0) 1 60 18 34 90	11 Rue Georges Charpak 77127 Lieusaint, France
China	Service/Parts/Sales: Horizon Hobby – China	info@horizonhobby.com.cn +86 (021) 5180 9868	Room 506, No. 97 Changshou Rd. Shanghai, China 200060

FCC Information

This device complies with part 15 of the FCC rules. Operation is subject to the following two conditions: (1) This device may not cause harmful interference, and (2) this device must accept any interference received, including interference that may cause undesired operation.

CAUTION: Changes or modifications not expressly approved by the party responsible for compliance could void the user's authority to operate the equipment.

This product contains a radio transmitter with wireless technology which has been tested and found to be compliant with the applicable regulations governing a radio transmitter in the 2.400GHz to 2.4835GHz frequency range.

Antenna Separation Distance

When operating your Spektrum transmitter, please be sure to maintain a separation distance of at least 5 cm between your body (excluding fingers, hands, wrists, ankles and feet) and the antenna to meet RF exposure safety requirements as determined by FCC regulations.

The following illustrations show the approximate 5 cm RF exposure area and typical hand placement when operating your Spektrum transmitter.

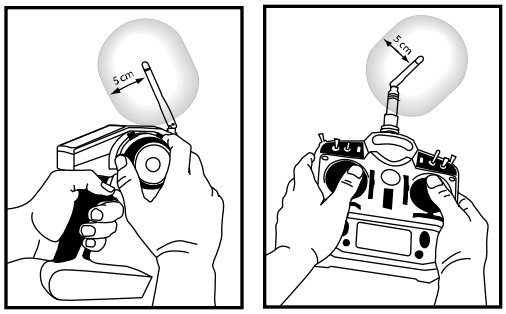

IC Information

This device complies with Industry Canada license-exempt RSS standard(s). Operation is subject to the following two conditions:

(1) this device may not cause interference, and (2) this device must accept any interference, including interference that may cause undesired operation of the device.

Compliance Information for the European Union

AT	BE	BG	CZ	CY	DE	DK
EE	ES	FI	FR	GR	HR	HU
IE	IT	LT	LU	LV	MT	NL
PL	PT	RO	SE	SI	SK	UK
IS	LI	NO	CH			

Declaration of Conformity

(in accordance with ISO/IEC 17050-1)

No. HH2013080502

Product(s): BLH 350 QX RTF

Item Number(s): BLH7800, BLH7800M1

Equipment class: 2

The object of declaration described above is in conformity with the requirements of the specifications listed below, following the provisions of the European R&TTE directive 1999/5/EC, EMC Directive 2004/108/EC and LVD Directive 2006/95/EC:

EN 300-328 V1.7.1: 2006
EN 301 489-1 V1.9.2: 2012
EN 301 489-17 V2.1.1: 2009

EN60950-1:2006+A11:2009+A1:2010+A12: 2011
EN61000-3-2:2006+A1:2009+A2:2009
EN61000-3-3:2008

EN55022:2010 + AC:2011
EN55024:2010

Signed for and on behalf of:
Horizon Hobby, Inc.
Champaign, IL USA
Aug 05, 2013

Robert Peak
Chief Financial Officer
Horizon Hobby, Inc.

Declaration of Conformity

(in accordance with ISO/IEC 17050-1)

No. HH2013080503

Product(s): BLH 350 QX BNF

Item Number(s): BLH7880

Equipment class: 1

The object of declaration described above is in conformity with the requirements of the specifications listed below, following the provisions of the European R&TTE directive 1999/5/EC, EMC Directive 2004/108/EC and LVD Directive 2006/95/EC:

EN 301 489-1 V1.9.2: 2012
EN 301 489-17 V2.1.1: 2009

EN61000-3-2:2006+A1:2009+A2:2009
EN61000-3-3:2008
EN60950-1:2006+A11:2009+A1:2010+A12: 2011

EN55022:2010 + AC:2011
EN55024:2010

Signed for and on behalf of:
Horizon Hobby, Inc.
Champaign, IL USA
Aug 05, 2013

Robert Peak
Chief Financial Officer
Horizon Hobby, Inc.

Instructions for disposal of WEEE by users in the European Union

This product must not be disposed of with other waste. Instead, it is the user's responsibility to dispose of their waste equipment by handing it over to a designated collections point for the recycling of waste electrical and electronic equipment. The separate collection and recycling of your waste equipment at the time of disposal will help to conserve natural resources and ensure that it is recycled in a manner that protects human health and the environment. For more information about where you can drop off your waste equipment for recycling, please contact your local city office, your household waste disposal service or where you purchased the product.

©2013 Horizon Hobby, Inc.
Blade, SAFE, SAFE Circle, the SAFE logo, Bind-N-Fly, the BNF logo, E-flite, Celectra, DSM, DSM2, DSMX, and the Horizon Hobby logo are trademarks or registered trademarks of Horizon Hobby, Inc.
The Spektrum trademark is used with permission of Bachmann Industries, Inc.
US 7,391,320. Other patents pending.
Created 9/13 42408

Appendix B

Phantom Quad Copter

Operator Manual

PHANTOM Flying Flowchart V1.0 (Simplified Version)

This flowchart is aiming at help you to get familiar with the flying procedures of PHANTOM, please read the Manual carefully to get the operation details. Its corresponding Firmware Version is V3.0.

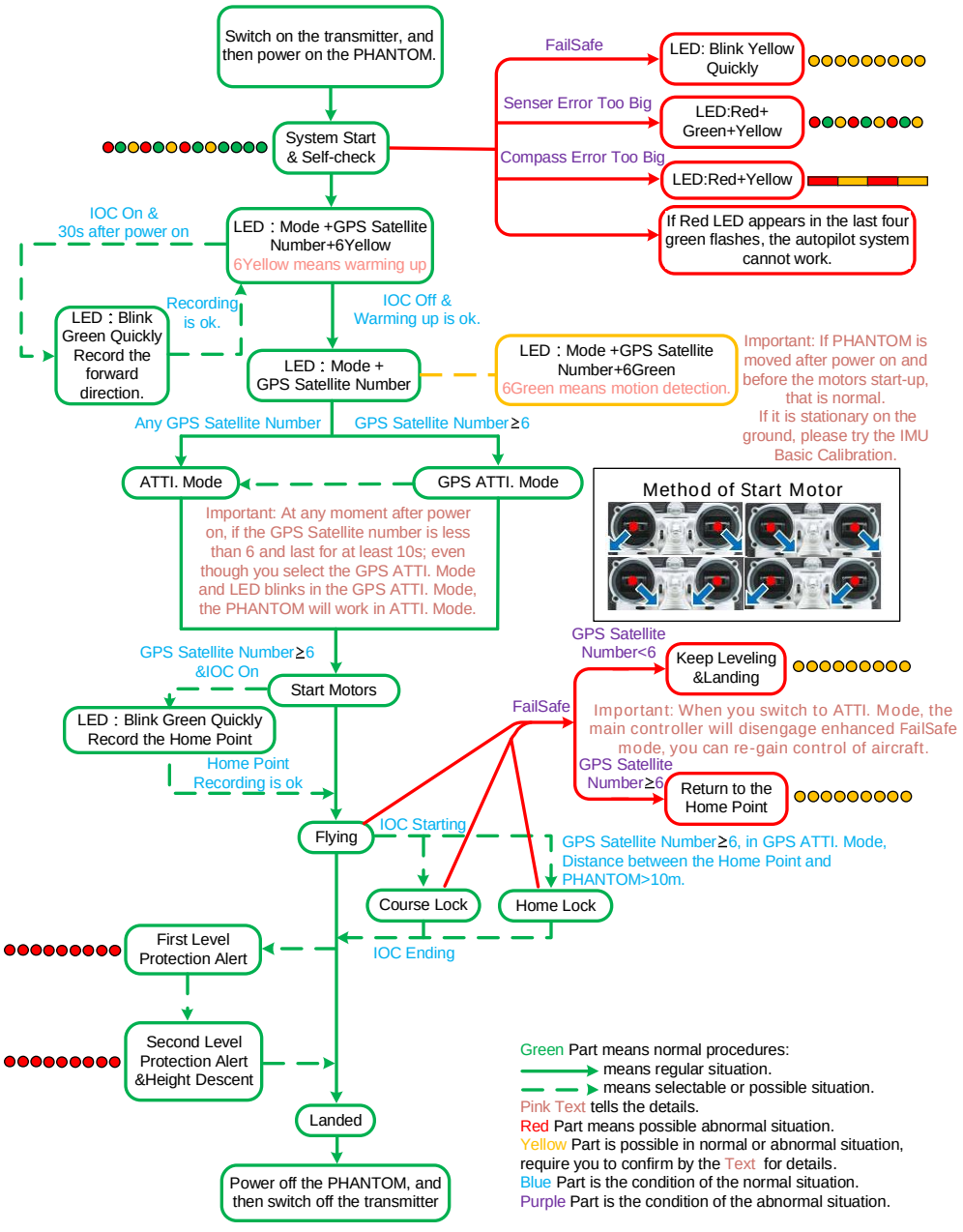

PHANTOM Quick Start Manual V1.7

2013.09.25 Revision

For NAZA-M Firmware V3.12

& Assistant Software V2.12

Thank you for purchasing our product. Please visit the DJI website, PHANTOM section to confirm if the printed manual is the latest one according to the manual version. If not, please download and refer to the latest manual.

Please read the entire manual strictly and follow these steps to use you product. The manual will get you ready to fly by doing simple operations. You can get an advanced manual from DJI website to learn more about PHANTOM, for example, configuring parameters by connecting to assistant software, changing the transmitter to Mode1, matching frequency between the transmitter and the receiver, etc.

Make sure to use the NAZA-M assistant software of 2.0 version (or above 2.0) to carry out firmware upgrade and parameter configuration. DO NOT use the NAZA-M assistant software bellow 2.0 version.

Note: The built-in autopilot system is NAZA-M; you can obtain the current NAZA-M Firmware Version according to the Assistant Software. If you ever upgrade your NAZA-M Firmware, please carefully read the corresponding NAZA-M release note and NAZA-M quick start guide.

www.dji.com

©2012-2013 DJI Innovations. All Rights Reserved.

Content

CONTENT 2
DISCLAIMER & WARNING 3
CAUTIONS FOR PRODUCT USE 4
TRADEMARKS 4
BATTERY USAGE & CHARGING CAUTIONS 5
IN THE BOX 6
REQUIRED ITEMS 6
INTRODUCTION 7
AIRCRAFT & TRANSMITTER BASIC OPERATION 8
BEFORE FLYING 9
FLIGHT TEST 13
THE FLOWCHART OF FAILSAFE AND HOW TO REGAIN CONTROL 14
LOW-VOLTAGE ALERT 15
LED DESCRIPTION 15
SPECIFICATIONS OF THE AIRCRAFT 16

©2012-2013 DJI Innovations. All Rights Reserved.

Disclaimer & Warning

Please read this disclaimer carefully before using the PHANTOM. By using this product, you hereby agree to this disclaimer and signify that you have read them fully. **THIS PRODUCT IS NOT SUITABLE FOR PEOPLE UNDER THE AGE OF 18.**

PHANTOM is an excellent flight platform offering an excellent flight experience, only if it is powered normally and in a good working condition. Despite the PHANTOM having a built-in autopilot system and our efforts in making the operation of the controller as safe as possible when the main power battery is connected, we strongly recommend users to remove all propellers when calibrating and setting parameters. Make sure all connections are good, and keep children and animals away during firmware upgrade, system calibration and parameter setup. DJI Innovations accepts no liability for damage(s) or injuries incurred directly or indirectly from the use of this product in the following conditions:

1. Damage(s) or injuries incurred when users are drunk, taking drugs, drug anesthesia, dizziness, fatigue, nausea and any other conditions no matter physically or mentally that could impair your ability.
2. Damage(s) or injuries caused by subjective intentional operations.
3. Any mental damage compensation caused by accident.
4. Failure to follow the guidance of the manual to assemble or operate.
5. Malfunctions caused by refit or replacement with non-DJI accessories and parts.
6. Damage(s) or injuries caused by using third party products or fake DJI products.
7. Damage(s) or injuries caused by mis-operation or subjective mis-judgment.
8. Damage(s) or injuries caused by mechanical failures due to erosion, aging.
9. Damage(s) or injuries caused by continued flying after low- voltage protection alert is triggered.
10. Damage(s) or injuries caused by knowingly flying the aircraft in abnormal condition (such as water, oil, soil, sand and other unknown material ingress into the aircraft or the assembly is not completed, the main components have obvious faults, obvious defect or missing accessories).
11. Damage(s) or injuries caused by flying in the following situations such as the aircraft in magnetic interference area, radio interference area, government regulated no-fly zones or the pilot is in backlight, blocked, fuzzy sight, and poor eyesight is not suitable for operating and other conditions not suitable for operating.
12. Damage(s) or injuries caused by using in bad weather, such as a rainy day or windy (more than moderate breeze), snow, hail, lightning, tornadoes, hurricanes etc.
13. Damage(s) or injuries caused when the aircraft is in the following situations: collision, fire, explosion, floods, tsunamis, subsidence, ice trapped, avalanche, debris flow, landslide, earthquake, etc.
14. Damage(s) or injuries caused by infringement such as any data, audio or video material recorded by the use of aircraft.
15. Damage(s) or injuries caused by the misuse of the battery, protection circuit, RC model and battery chargers.
16. Other losses that are not covered by the scope of DJI Innovations liability.

©2012-2013 DJI Innovations. All Rights Reserved.

Cautions for Product Use

Please check the following steps carefully every time before flight.

1. Before use of the product, please accept some flight training (Using a simulator to practice flying, getting instruction from a professional person, etc.).
2. Check that all parts of the multi-rotor are in good condition before flight. Do not fly with aging or broken parts.
3. Check that the propellers and the motors are installed correctly and firmly before flight. Make sure the rotation direction of each propeller is correct. Do not get close to or even touch the working motors and propellers to avoid serious injury.
4. Do not over load the multi-rotor (should be less than 1200g).
5. Make sure that the transmitter battery and flight battery are fully charged.
6. Try to avoid interference between the remote control transmitter and other wireless equipment.
7. Make sure to switch on the transmitter first, then power on the multi-rotor before takeoff! Power off the multi-rotor first, then switch off the transmitter after landing!
8. The fast rotating propellers of PHANTOM will cause serious damage and injury. Always fly the multi-rotor 3m or above away from you and unsafe conditions, such as obstacles, crowds, high-voltage lines, etc. FLY RESPONSIBLY.
9. All parts must be kept out of the reach of children to avoid CHOKE HAZARD; if a child accidentally swallows any part you should immediately seek medical assistance.
10. Please always keep the compass module away from the magnet. Otherwise it may damage the compass module and lead the aircraft to work abnormally or even be out of control.
11. DO NOT use the PHANTOM transmitter (receiver) with the other third party remote control equipment.
12. Make sure to use the NAZA-M assistant software of 2.0 version (or above 2.0) to carry out firmware upgrade and parameter configuration. DO NOT use the NAZA-M assistant software bellow 2.0 version.
13. The built-in ESCs of PHANTOM ONLY support 3S (11.1V) power supply.
14. ONLY use the DJI original motor and 8-inch propeller.
15. If you want to put the PHANTOM in a car, please keep it away from the speaker, since the compass module may be magnetized.
16. DO NOT use the magnetic screwdriver. Otherwise, keep the screwdriver at least 10cm away from the compass module, to avoid magnetic interference.
17. If you use your own equipment(for example: GoPro3), please make sure the WiFi function is disabled, to avoid the interference on the transmitter, which may cause the PHANTOM to FailSafe, crack and or even to fly away.
18. For Mac user, please install Windows Parallel to run assistant software.

If you have any problem you cannot solve during installation, please contact a DJI Authorized Dealer.

Trademarks

DJI and PHANTOM are registered trademarks of DJI Innovations. Names of product, brand, etc., appearing in this manual are trademarks or registered trademarks of their respective owner companies. This product and manual are copyrighted by DJI Innovations with all rights reserved. No part of this product or manual shall be reproduced in any form without the prior written consent or authorization of DJI Innovations. No patent liability is assumed with respect to the use of the product or information contained herein.

©2012-2013 DJI Innovations. All Rights Reserved.

Battery Usage & Charging Cautions

1. Do not put the battery into water; store the battery in a cool and dry environment.
2. Only use the correctly specified batteries
3. Batteries must be kept out of the reach of children; if a child accidentally swallows the battery you should immediately seek medical assistance.
4. Do not use or store the battery near fire.
5. Battery should be charged with proper standard charger.
6. Do not connect the battery reversed in positive and negative terminals in the charger or equipment.
7. Do not connect the battery directly to the wall plugs or vehicle-mounted socket.
8. Do not put the battery into a fire or heat the battery.
9. Do not let the battery terminals (+and-) touch together to cause short-circuit.
10. Do not transport or store the battery together with metal objects.
11. Do not hit or throw the battery.
12. Do not weld the battery terminals together.
13. Do not drive a nail in, hit with a hammer, or stomp on the battery.
14. Do not disassemble or alter the battery.
15. Do not use or store the battery in extreme heat environments, such as direct sunlight or in the car in hot weather. Otherwise, the battery will overheat, may cause fire (or self-ignite), this will affect the performance of the battery, shorten the service life of the battery.
16. Do not use the battery in strong electrostatic areas, otherwise the electronic protection may be damaged which may cause a hazard.
17. If you get the battery electrolyte leakage into your eyes, don't rub, first wash your eyes with clean water then seek medical assistance immediately. If not handled in a timely manner, eyes could be damaged.
18. Do not use the battery when it emits an odour, high temperature, deformation, change in colour or other abnormal phenomena; if the battery is in use or charging, you should stop charging or using immediately.
19. If the battery terminal gets dirty, please clean it with a dry cloth before using. Otherwise it will cause a poor contact, thus causing energy loss or inability to charge.
20. Discarded battery could lead to a fire; you should completely discharge the battery and wrap the output terminal with insulating tape before discarding.
21. DO NOT drain the battery of phantom or leave the battery plugged into the PHANTOM when unused. When there is low voltage alert please landing timely to avoid damages to the battery or others.

©2012-2013 DJI Innovations. All Rights Reserved.

In the Box

Aircraft	Transmitter	Landing Gear (with Compass Module)
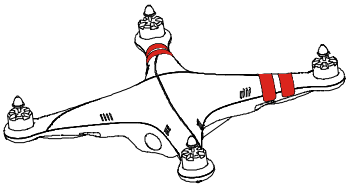	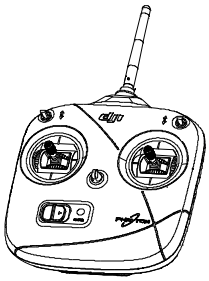	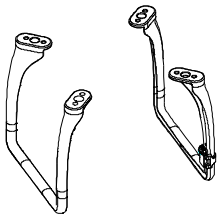
Frame for Camera	Propellers	Assistant Wrench
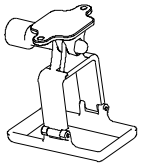	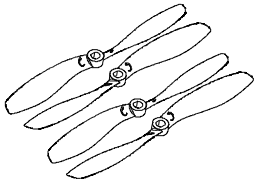	
USB Cable	Screw Package (M3x6)	Accessory
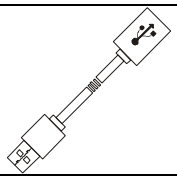		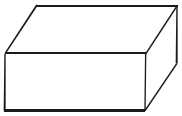

Required Items

Phillips Screwdriver	5# AA Batteries
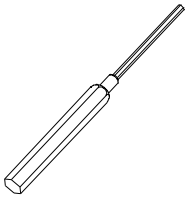	

©2012-2013 DJI Innovations. All Rights Reserved.

Introduction

The PHANTOM is an all-in-one small Quad Copter designed for multi-rotor enthusiasts. Before shipping from the factory, it has been configured and fully tested, which means you have no configuration to do.

- Built-in
  - ✓ NAZA-M Autopilot System
    (Refer to NAZA-M manual for details)
  - ✓ GPS & Compass Module
  - ✓ R/C Receiver
  - ✓ Power System for Flight
  - ✓ LED Indicator
  - ✓ USB Interface
    (in the Battery Compartment)
- Function
  - ✓ ATTI./GPS ATTI. Mode
  - ✓ Intelligent Orientation Control
  - ✓ Enhanced Fail-Safe
  - ✓ Low-Voltage Alert
- Camera Frame (For GoPro)
- Takeoff Weight:≤1200g

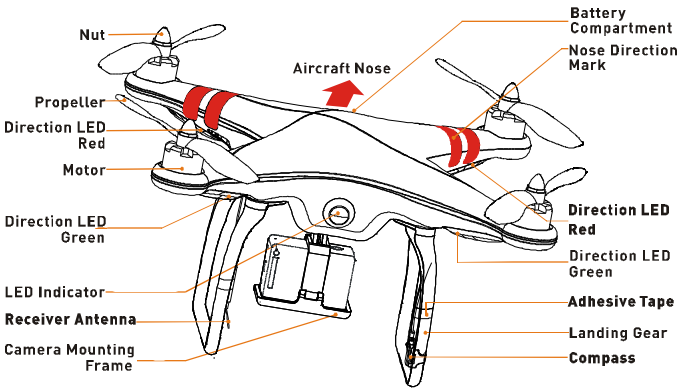

- ✓ Working Frequency: 2.4GHz ISM
- ✓ Control Channel Numbers of Transmitter: 7
- ✓ Communication Distance: 1000m
- ✓ Receiver Sensitivity(1%PER):

©2012-2013 DJI Innovations. All Rights Reserved.

Aircraft & Transmitter Basic Operation

Definitions

- **Stick neutral position and stick released** means the stick of Transmitter is pushed to the central position.
- **Command Stick** means the stick of Transmitter is pushed away from the central position.

Aircraft

Transmitter

©2012-2013 DJI Innovations. All Rights Reserved.

Before Flying

1. Installing the Transmitter Batteries

1. Open the battery compartment cover of the Transmitter.
2. Install 4x AA battery (5#) in accordance with the + / - pole.
3. Close the battery compartment cover of the Transmitter.

- DO NOT use the PHANTOM transmitter (receiver) with the other third party remote control equipment.
- Risk of explosion if replaced by an incorrect type.
- Dispose of used batteries according to the instructions.
- Remove the batteries after use.
- When the voltage is lower than 4V, the transmitter will alarm with sound of "**BB.....**", please change the batteries.

2. Battery Charging – LiPo Battery

Please use the full charged battery of 3S LiPo.
(Recommended parameters: 733496 - 2200MAH-20C

©2012-2013 DJI Innovations. All Rights Reserved.

4. Mount the Landing Gear with the Compass Module if Required

If the GPS ATTI. Mode is desired, you must first mount the landing gear which contains the Compass Module.

1. Prepare the aircraft and the landing gear.
2. Mount the landing gear with the Compass Module to the right part (shown as the following chart); make sure the 5-pin cable is through the hole of the landing gear. Fix the landing gear with screws (M3x6), and then connect the 5-pin cable to the Compass Module.
3. Mount the other landing gear to the left part.
4. Fix the antenna and the 5-pin cable on both landing gear by using the white adhesive tape.

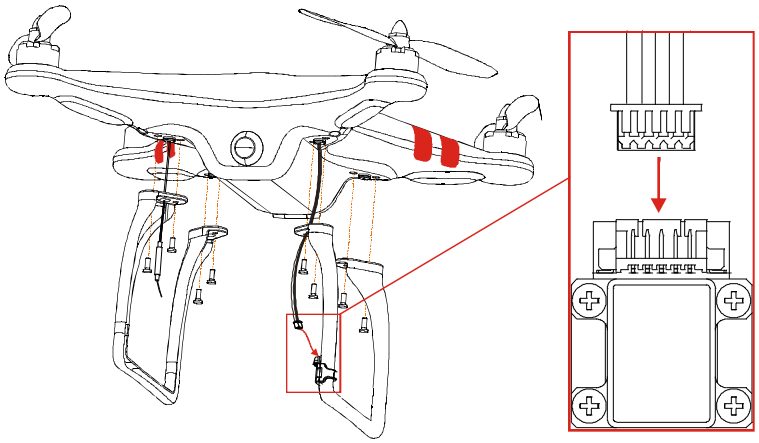

Landing Gear Mounting

Compass Module Connecting

- When flying, please make sure the compass module is stationary and firm.
- If the Landing Gear with the compass module mount on has been deformed, please replace it with a new one and mount it as the procedures above.
- The compass module is not waterproof, and not anti-oil.
- DO NOT use the magnetic screwdriver. Otherwise, keep the screwdriver at least 10cm away from the compass module, to avoid magnetic interference.

5. Turn on the Transmitter

1. Set the IOC and Control Mode switch to the top position.
2. Turn on the power switch of the Transmitter

©2012-2013 DJI Innovations. All Rights Reserved.

6. Power on the Aircraft

1. Place the aircraft on the ground
2. Open the battery compartment cover of the aircraft.
3. Put the battery into the compartment with the power cord facing outward.
4. Connect the battery and aircraft by the power lead and make sure the ESC's work properly. (Correct sound)
5. Keep the sticks of the Transmitter and the Aircraft stationary until the system start and self-check has finished ( ).
6. Put the power cable into the battery compartment.
7. Close the battery compartment cover.
8. The LED may blink Yellow 4 times quickly ( ). Start motor is disable during LED blinking Yellow 4 times quickly ( ), as the system is warming up.

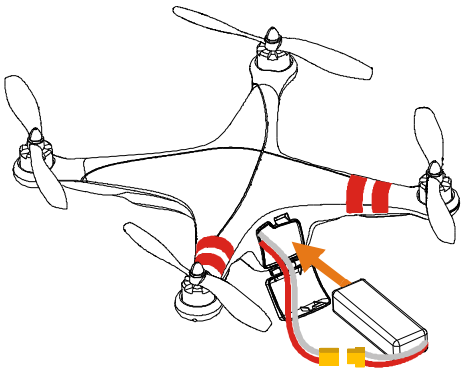

Notes

- Please contact your dealer if the "System start and self-check LED flashes" are not correct (Red LED appears in the last four green flashes) in the Step5.
- After the system start and self-checking has finished, if the LED blinks Red, Yellow and Green continually, that means the IMU data is abnormal. The PHANTOM will not work, please connect to the Assistant Software and follow the tips to do operation. If it blinks red and yellow lights alternately ( ), that means the compass error is too big, it can be caused by the following three cases. Please connect to the Assistant Software, select the "tools" tab and follow the tips of the "IMU Calibration" to do operation.

  1. There are ferromagnetic substance around; first make sure that the compass has been calibrated correctly, you can lift the aircraft up (about 1m from the ground), and stay away from the surrounding possible ferromagnetic material object, if there is no red and yellow flashing after lifting it up about 1m from the ground, then it will not affect the flight.

  2. The compass module had been put near a magnet; in this situation please timely replace the compass for a new one, otherwise it will lead to some abnormal action, or even loss of control.

  3. The compass is not properly calibrated; in this situation please calibrate the compass correctly again, please see the GPS compass calibration for details.

©2012-2013 DJI Innovations. All Rights Reserved.

7. GPS & Compass Calibration

If the Compass Module is not used, you can skip this step.

The GPS module has a built-in magnetic field sensor for measuring the geomagnetic field, which is not the same in different areas. The GPS module will not work unless the Compass Module has been connected. Make sure the Compass Module connections are correct.

Please always keep the compass module away from the magnet. If this situation occurs please change the compass module before flying. Otherwise it may damage the compass module and lead the aircraft to work abnormally or even be out of control.

Calibrate the compass before the first flight or when flying in a different area. Make sure to keep away from ferromagnetic substance and other electronic equipment when calibrating or flying. If you keep having calibration failure, it might suggest that there is magnetic interference or other ferromagnetic substance, please avoid flying in this area.

If you have calibration failure or the LED blinks red and yellow lights alternately ( ), please connect to the Assistant Software, select the "Tools" tab and follow the tips of the "IMU Calibration" to do operation.

1. Quickly switch the control mode switch from ***ATTI. Mode*** to ***GPS ATTI. Mode*** and back to ***ATTI. Mode*** for 6 to 10 times, The LED indicator will turn to constantly yellow.
2. Rotate your aircraft around the horizontal axis (about 360°) until the LED changes to constant green, and then go to the next step.
3. Hold your aircraft vertically and rotate it (its nose is downward) around the vertical axis (about 360°) until the LED turns off, meaning the calibration is finished.
4. If the calibration was successful, calibration mode will exit automatically. If the calibration has failed, the LED keeps flashing quickly Red. Switch the control mode switch one time to cancel the calibration, and then re-start from step 1.

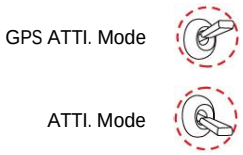

ATTI. Mode->GPS ATTI. Mode -> ATTI. Mode is one time

©2012-2013 DJI Innovations. All Rights Reserved.

Flight Test

1. If in GPS ATTI. Mode, place the aircraft in an open space without buildings or trees. Take off the aircraft after 6 or more GPS satellites are found (Red LED blinks once or no blinking). If in ATTI. Mode, you can skip this step.
2. Place the aircraft 3 meters away from you and others, to avoid accidental injury.
3. Start-up
   - ✓ Switch on the transmitter first, then power on multi-rotor! Keep the aircraft stationary until the system start and self-check has finished.
   - ✓ Please wait for the system to warm up gradually with the LED blinks Yellow 4 times quickly (●●●●). You should not start the motors until the blinking disappears.
   - ✓ Keep the aircraft stationary, and execute the CSC to start the motors.

   - ✓ Release the yaw, roll and pitch sticks and keep them at the neutral position, at the same time raise the throttle stick from the bottom. The motors will stop if you do not push the throttle stick from the bottom within 3 sec and you will need to re-start the motors.
   - ✓ Keep raising the throttle stick until all the rotors are working, push the throttle stick to the mid position and then take-off your multi-rotor gently, pay attention not to push the stick excessively.
   - ✓ Pay attention to the aircraft movement at any time, and use the sticks to adjust the aircraft's position. Keep the yaw, roll, pitch and throttle sticks at the mid position to hover the aircraft at desired height.
4. Lower the aircraft slowly until touch down is achieved. The motors will stop automatically after 3 seconds, or you can repeat the start-up stick command to stop the motors sooner.
5. Please always power off the aircraft first, and then switch off the transmitter after landing.

FLYING NOTES

©2012-2013 DJI Innovations. All Rights Reserved.

The flowchart of failsafe and how to regain control

An introduction of Go-Home and Landing.

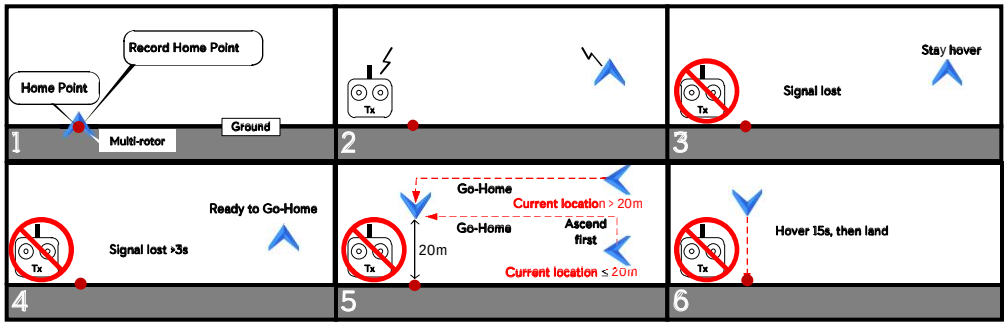

Home-point: Every time you power on, after first motors start, and if 6 or more GPS satellites are found (Red light blinks once or no blinking) for 10 seconds, the current position of multi-rotor will be saved as home-point by MC automatically.

Note	1. Please make sure to record the home-point during flight, and clearly know where it is. 2. During go-home the nose direction of the aircraft is facing toward the home-point, and the aircraft is flying directly from the current position to the home-point.

©2012-2013 DJI Innovations. All Rights Reserved.

Low-Voltage Alert

Low-Voltage Alert is to indicate that the battery cannot provide enough power for the aircraft, in order to warn you to land the aircraft ASAP. There are both first level and second level protections. It is not for fun, you should land your aircraft ASAP to prevent your aircraft from crashing or other harmful consequences!!!

In ATTI. Mode & GPS ATTI. Mode.

- ✓ The first level protection has LED warning.
- ✓ During second level protection the aircraft will land automatically with LED warning. Meanwhile the center point of throttle stick will move up slowly to 90% of endpoint, you should land ASAP to prevent your aircraft from crashing! When the center point is at 90% of endpoint, aircraft will still ascend slowly if you continue to pull the throttle stick, and the control of Pitch, Roll and Yaw are the same as before.

(1) Configure the FailSafe function in the **assistant software -> "Advanced" -> "F/S"** and read the instruction thoroughly and carefully.

(2) Configure the Low-Voltage Alert function in the **assistant software -> "Advanced" -> "Voltage"** and read the instruction thoroughly and carefully.

LED Description

System Status	LED Flashing
System start and self-check	
IMU abnormal data	
Warm up after power on	
Bias of Sensors too Big	
Compass Error too Big	
Tx signal lost	
Low Voltage Alert	
Record forward direction or home point	
Control Mode Indictor	Manual Mode: None ATTI. Mode: 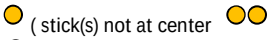 (stick(s) not at center)
	GPS Mode: 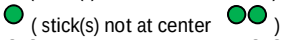 (stick(s) not at center)
	IOC Mode: 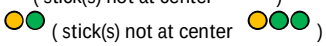 (stick(s) not at center)
GPS Signal State Indicator	

©2012-2013 DJI Innovations. All Rights Reserved.

Compass Calibration	LED Flashing
Begin horizontal calibration	
Begin vertical calibration	
Calibration or others error	

ESC Sound Introduction

ESC State	Sound
Ready	♪1234567
Throttle stick is not at bottom	BBBBBB...
Input signal abnormal	B--------B--------B...
Input voltage abnormal	BB---BB---BB---BB...

Transmitter State Introduction

Transmitter State	Introduction
The throttle stick isn't at the lowest position after turning on may alarm.	**B--------BB**
Linking between the Transmitter and the Receiver	
Normal Operation	
Low-battery Alert (Need to change the battery)	**BB.....**

Specifications of the Aircraft

Parameters	Range
Operating Temperature	-10°C ~ 50°C
Power Consumption	3.12W
Supported Battery	ONLY 3S LiPo
Take-off Weight	<1200g
Hovering Accuracy (GPS Mode)	Vertical: ± 0.8m. Horizontal: ± 2.5m
Max Yaw Angular Velocity	200°/s
Max Tilt Angle	35°
Max Ascent / Descent Speed	6m/s
Max Flight Velocity	10m/s
Diagonal distance (motor center to motor center)	350mm
Weight	670g
Weight(with Battery)	800g

©2012-2013 DJI Innovations. All Rights Reserved.

CE Statement

Due to the used enclosure material, the device shall only be connected to a USB Interface of version 2.0 or higher. The connection to so called power USB is prohibited.

CAUTION RISK OF EXPLOSION IF BATTERY IS REPLACED BY AN INCORRECT TYPE. DISPOSE OF USED BATTERIES ACCORDING TO THE INSTRUCTIONS.

Hereby, DJI Innovations Corporation declares that this device is in compliance with the essential requirements and other relevant provisions of Directive 1999/5/EC.

CE 0700

FCC Statement

This equipment complies with FCC RF radiation exposure limits set forth for an uncontrolled environment.

This device complies with part 15 of the FCC rules. Operation is subject to the following two conditions: (1) this device may not cause harmful interference, and (2) this device must accept any interference received, including interference that may cause undesired operation.

NOTE: The manufacturer is not responsible for any radio or TV interference caused by unauthorized modifications or changes to this equipment. Such modifications or changes could void the user's authority to operate the equipment.

NOTE: This equipment has been tested and found to comply with the limits for a Class B digital device, pursuant to part 15 of the FCC Rules. These limits are designed to provide reasonable protection against harmful interference in a residential installation. This equipment generates uses and can radiate radio frequency energy and, if not installed and used in accordance with the instructions, may cause harmful interference to radio communications. However, there is no guarantee that interference will not occur in a particular installation. If this equipment does cause harmful interference to radio or television reception, which can be determined by turning the equipment off and on, the user is encouraged to try to correct the interference by one or more of the following measures:

- Reorient or relocate the receiving antenna.
- Increase the separation between the equipment and receiver.
-Connect the equipment into an outlet on a circuit different from that to which the receiver is connected.
-Consult the dealer or an experienced radio/TV technician for help.

©2012-2013 DJI Innovations. All Rights Reserved.

PHANTOM

Advanced Manual

V 1.4
2013.03.22 Revision

©2013 DJI Innovations. All Rights Reserved.

Index

INDEX 2

A1 SOFTWARE AND DRIVER INSTALLATION 3

A2 CONFIGURATION AND FIRMWARE& SOFTWARE UPGRADE 3

A3 LINKING THE TRANSMITTER AND RECEIVER 4

A4 CHANGING THE CONTROL MODE OF THE TRANSMITTER 5

A5 TRANSMITTER CALIBRATION 7

A6 MOUNT CAMERA AND CAMERA FRAME 8

A7 INTELLIGENT ORIENTATION CONTROL (IOC) FLIGHT (WITH GPS & COMPASS MODULE) 9

A8 MAINTENANCE 11

©2013 DJI Innovations. All Rights Reserved.

A1 Software and Driver Installation

Make sure to use the NAZA-M assistant software of 2.0 version (or above 2.0) to carry out firmware upgrade and parameter configuration. DO NOT use the NAZA-M assistant software bellow 2.0 version.

1. Please download the driver DJI Driver Installer and NAZA-M assistant software from the PHANTOM page of DJI website (http://www.dji-innovations.com/products/phantom/downloads/).
2. Connect the PHANTOM and the PC via the USB cable, power on the PHANTOM system.
3. Run the DJI Driver Installer, and follow the instructions strictly to finish installation.
4. Run the assistant software installer, and follow the instructions strictly to finish installation.

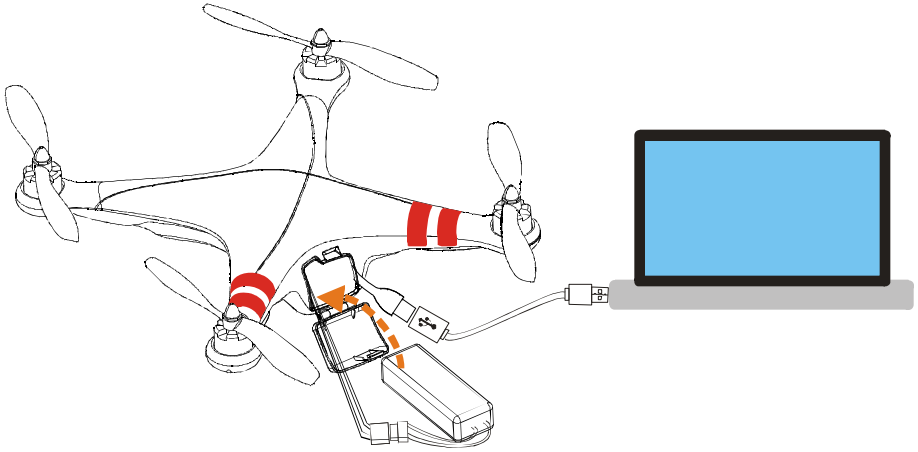

A2 Configuration and Firmware& Software Upgrade

1. Power on your computer. Make sure the computer is connected to the Internet for the first time you use.
2. Switch on the transmitter first, then power on the aircraft. Connect the aircraft to the PC with the USB cable. DO NOT break the connection until configuration or upgrade is finished.
3. Please refer to the "**Assembly &Configuration**->Step3" section of NAZA-M Quick Start Guide to get the detail of assistant software usage.
4. Refer to the "**Appendix**-> Firmware & Assistant Software Upgrade" section of NAZA-M Quick Start Guide to get the detail of assistant software usage.
5. If Manual Mode is required, please select "Manual" from the drop down list of Basic->RC->Control Mode Switch in the assistant software. Refer to the "**Flying Test**-> Step 1 Control Mode Knowledge" section of NAZA-M Quick Start Guide to get the detail about the Manual Mode.

©2013 DJI Innovations. All Rights Reserved.

A3 Linking the Transmitter and Receiver

The linking of the transmitter to the receiver of the PHANTOM was carried out before they left the factory. If necessary you can link the transmitter to the receiver as follows, for example you replace the transmitter. The default receiver type is PPM.

DO NOT use the PHANTOM transmitter (receiver) with the third party remote control equipment.

1. Please remove the housing by referring to the section of **A8 Maintenance** -> **Remove the Housing**.
2. Locate the receiver module according to the following figure.
3. After powering on the aircraft and the transmitter, if the LED indicator of the receiver on the control board is lit solid red, this means the receiver currently has no connection with any transmitter.
4. Press down the link button for more than two seconds until the LED indicator blinks, then release the button.
5. Push the throttle stick to the lowest position and turn on the transmitter. Then if the LED indicator of the receiver turns off, the link between the transmitter and the receiver has succeeded. (Linking operation can be done only when the LED indicator of the transmitter changes to blinking red .)

Note:

- If the transmitter can't enter the linking mode, please check that the throttle stick lies in the lowest position.
- You can use your R/C system normally only after the linking is done successfully.

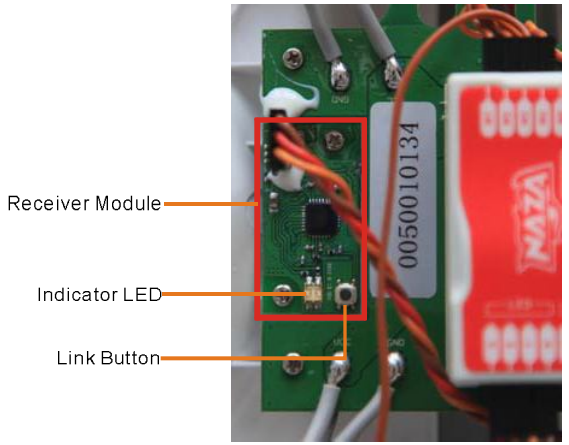

©2013 DJI Innovations. All Rights Reserved.

A4 Changing the Control Mode of the Transmitter

You can change the operation mode of the transmitter according to the following procedures if necessary.(The operation mode of Mode1 and Mode2 are shown as below.)

Make sure to carry out the **A5 Transmitter Calibration,** if the Control Mode of the Transmitter is changed.

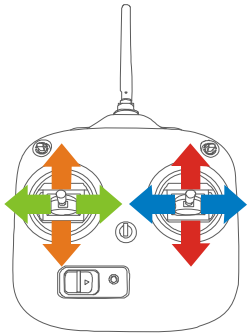

Mode1: Throttle, it cannot hold the central position when released.
Roll, it can return to the central position when released.
Pitch, it can return to the central position when released.
Yaw, it can return to the central position when released.

Mode2: Throttle, it cannot hold the central position when released.
Roll, it can return to the central position when released.
Pitch, it can return to the central position when released.
Yaw, it can return to the central position when released.

1. Remove the right Throttle Ratchet plate and the Ratchet Nut. Assemble the Ratchet Nut to the Nut Hole Location , and fix the Throttle Ratchet onto the Ratchet Nut and the Screw Hole Location. Adjust the screw height of the Throttle Support to change the tension, so as to give you the required operating feel.
2. Remove the left Centering Unit and the Centering Spring. Assemble them to the corresponding position of the Right part (Close to the middle location of the transmitter). Then adjust the height of the Adjusting Screw, so as to give you the required operating feel. (Note: Be careful not to excessively tension the spring when moving and fixing, to avoid damage.)
3. Exchange the connectors of Channel 2 (AIN2) and Channel 3 (AIN3). (Note: Take care about the connector direction.)

Mode2

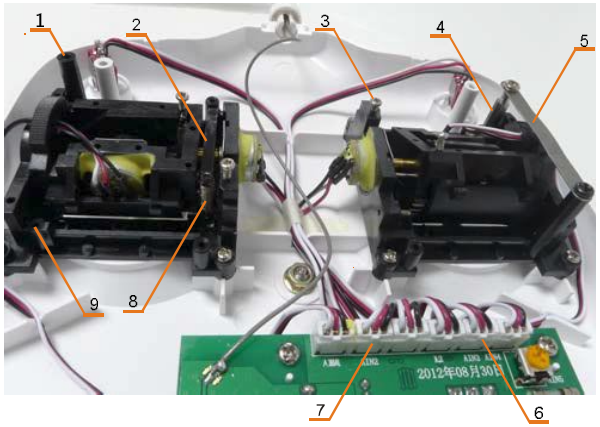

NO.	Name
1	Screw Hole Location
2	Centering Unit
3	Adjusting Screw
4	Ratchet Nut
5	Throttle Ratchet
6	3rd Channel
7	2nd Channel
8	Centering Spring
9	Nut Hole Loc tion

©2013 DJI Innovations. All Rights Reserved.

The following figure shows the successful change of transmitter mode to Mode 1.

Mode1

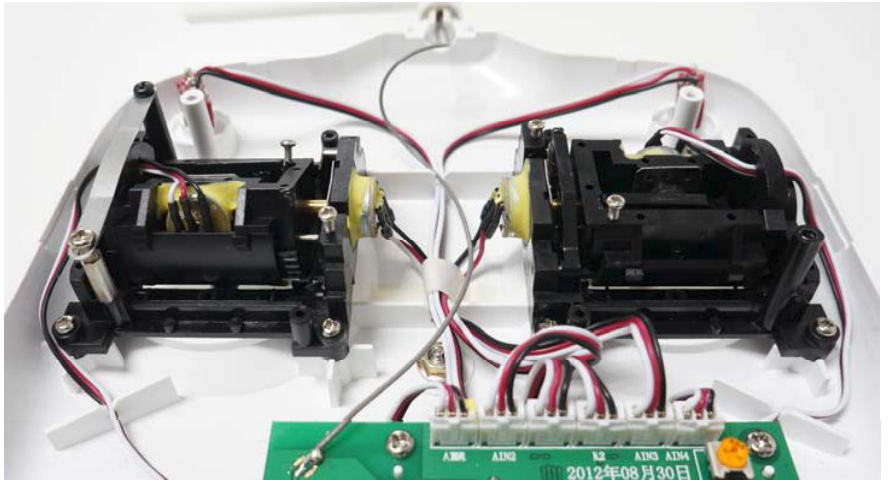

©2013 DJI Innovations. All Rights Reserved.

A5 Transmitter Calibration

If the control mode of the transmitter is changed or calibration has not been carried out for a long time, transmitter calibration is necessary.

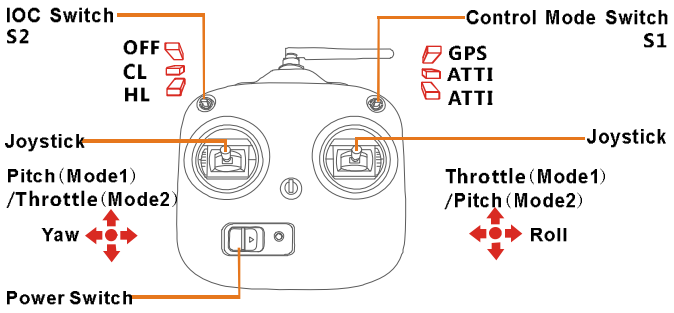

CL：Course Lock

HL：Home Lock

1. Set the switch S2 at the OFF position, and the switch S1 at the GPS position
2. Push the Throttle stick to the top position, and push the Pitch stick to the top position. Keep the Pitch stick at the top position manually since it can return to the central position when released.
3. Turn on the Power Switch of the transmitter, you should hear the indicator sound of “Di—Di Di” from the transmitter repeatedly. Toggle the switch S2 to the CL position, you should hear an indicator sound of “Di” from the transmitter, in this case, the transmitter has entered the calibration mode. (During this period, the Throttle stick and the Pitch stick must be kept at the top position all the time.)
4. Release the Pitch stick and pull the Throttle stick to the central position. Toggle the switch S1 to the ATTI position; you should hear an indicator sound of “Di” from the transmitter. Then move all of the sticks throughout their complete range several times. After this, put the Throttle stick to the bottom position, and toggle the switch S2 to the HL position, you should hear an indicator sound of “Di” from the transmitter, in this case, the transmitter has been calibrated successfully.

©2013 DJI Innovations. All Rights Reserved.

A6 Mount Camera and Camera Frame

Please mount the Camera and Camera Frame if necessary.

（1）Mount the Camera to the Camera Frame

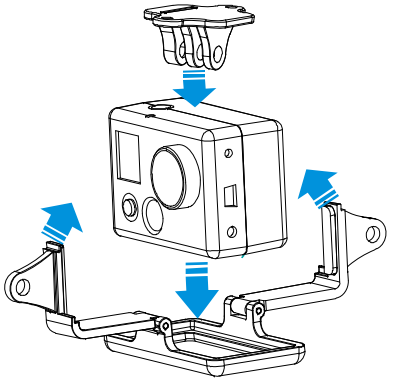

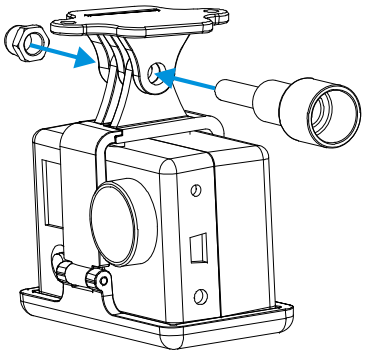

（2）Mount the Camera and Camera Frame to the aircraft

Make sure to use the dedicated cross screws of the type M3.0*6, since an over long screw will puncture the battery by passing through the battery compartment and could lead to explosion or fire.

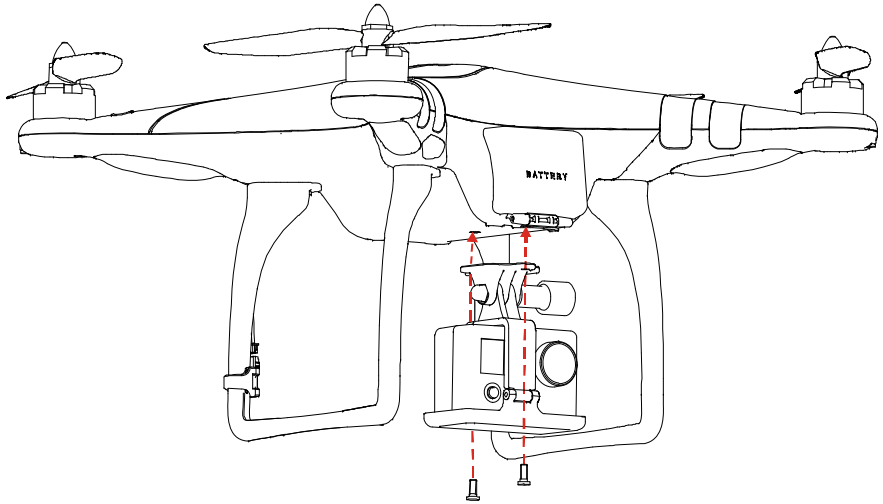

©2013 DJI Innovations. All Rights Reserved.

A7 Intelligent Orientation Control (IOC) Flight (with GPS & Compass module)

Make sure to open the IOC function in the NAZA-M assistant software before using.

Definition of Forward Direction: Quad -rotor will fly along this direction when you push the elevator stick.

Graphic Description

Nose direction Forward direction Home point Over 10m from Home point

Before You Start

Usually, the forward direction of a flying aircraft is the same as the nose direction. By using IOC, wherever the nose points, the forward direction has nothing to do with nose direction:

- In course lock flying, the forward direction is the same as a recorded nose direction. See the following figures (The red and blue arrows on the transmitter is corresponding to pitch and roll operations):

- In home lock flying, the forward direction is the same as the direction from home point to aircraft. See the following figures (The red and blue arrows on the transmitter is corresponding to pitch and roll operations):

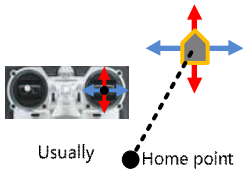

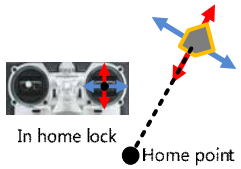

Method of Forward Direction & Home Point Recording

If you use the IOC function, please keep the Forward Direction of Course Lock Flying and the home point of Home Lock Flying in mind at any time. There are two ways to record the forward direction and the home point: Manually and Automatically. You may choose any one record method.

	Course Lock Flight	Home Lock Flight
Automatically	30 seconds after you power on the quad-rotor.	Before takeoff, the current position of the quad-rotor will be saved as home point when you push the throttle stick for the first time after 6 or more GPS satellites have been found.
Manually	Switch the S2 between **OFF** and **CL** position quickly 3 to 5 times to record current nose direction as new forward direction after you power on the quad-rotor for 30s. (**OFF** ->**CL**-> **OFF** is one time.)	When 6 or more GPS satellites are found, you can toggle the S2 switch between **CL** and **HL** position quickly 3 to 5 times to record the current position of the quad-rotor as the new home point. (**CL** -> **HL** -> **CL** is one time.)

©2013 DJI Innovations. All Rights Reserved.

IOC Flying Test

Realize an IOC flight by the following procedures.

During the same flight	STEP1: Record	STEP2: ON	STEP3: OFF	STEP4: ON again
Course Lock				
Switch Setting	Record forward direction	Set switch S1 to **GPS** or **ATTI** position, S2 to **CL** position	Set switch S2 to **OFF** position	Toggle switch S2 from **OFF** to **CL** position
Home Lock				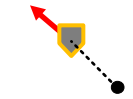
Switch Setting	Record home point	Set switch S1 to **GPS** position and S2 to **HL** position	Set switch S2 to **OFF** position	Toggle switch S2 from **OFF** to **HL** position

IOC FLYING NOTES ! ! !

- LED will blink quickly if recording is successful. LED will blink between and slowly to indicate the IOC mode only when MC is ready to fly in course lock or home lock modes.
- Home lock flying requires that 6 or more GPS satellites are found and the aircraft is further than 10m away from the home point.
- Before you do the home lock flight, you have to fly the aircraft out of the 10m range around home point, and then flip the switch S2 to **HL** position to fly in home lock when all the requirements are met. If you have already toggled the switch S2 to **HL** position when the aircraft is still in 10m range around home point, and this is the first time you are going to fly in home lock during the current flight, then if all the requirements are met, MC will change into home lock automatically when the aircraft flies out of the 10m range around home point.
- When flying in Home Lock mode, if any of the following situations happen, then the system will quit Home Lock flying and automatically enter Course Lock flying. The aircraft will fly in Course Lock using the earlier forward direction.
  1. The aircraft fly's within 10m range of the home point.
  2. You toggle the control mode switch to the ATTI. Mode.
  3. The GPS signal becomes bad (The GPS signal LED is blinking Red twice or three times).
- When the aircraft is flying in home lock mode far away from you and the home point, please do not toggle the IOC switch many times quickly so as to avoid the change of home point without you intentionally knowing.
- We suggest that you should know clearly which flight lock method you are going to fly, and you know the locked forward direction or home point, before you switch on IOC mode during the flight.
- Continuously spinning the aircraft in flight will cause a yaw error. In this case, you can stop or slow down the spinning, so as to have better flight performance.

©2013 DJI Innovations. All Rights Reserved.

A8 Maintenance

1. Remove the Housing

1. Remove all the nuts and propellers by using the assistant wrench.
2. Remove the screws marked in the figure below using a Phillips Screwdriver and a Hexagon Screwdriver, and then remove the housing.

Note:

- Please take good care of the removed parts, for example, screws. Make sure to keep them safe and away from children.
- DO NOT use any thread locker, since the thread locker may corrode the shell of Phantom, may cause fractures.

©2013 DJI Innovations. All Rights Reserved.

2. Extension Power

There is an extension power cable in the Phantom for DIY use. The voltage from the Extension Power Cable is the same voltage as the power battery. The red cable is for positive and the grey cable is for negative. Make sure to keep the red cable and the grey cable separated, to avoid short circuit.

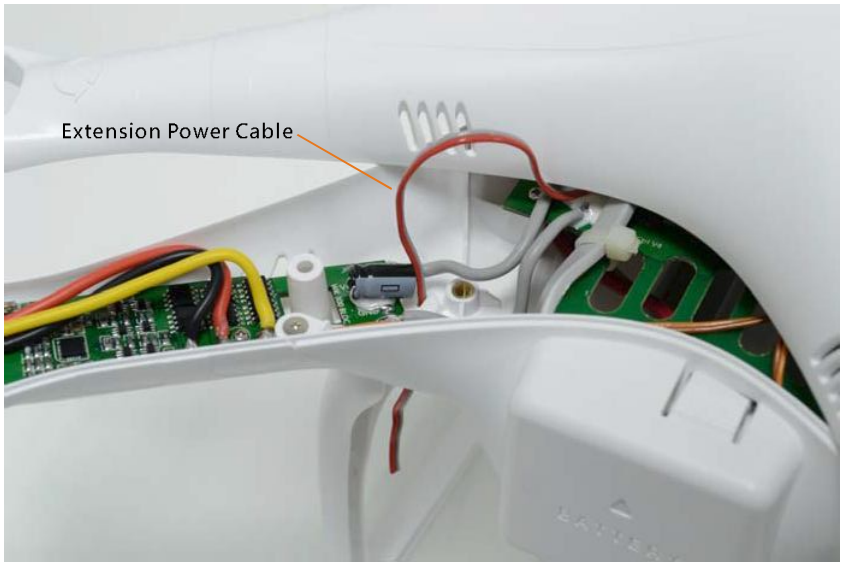

©2013 DJI Innovations. All Rights Reserved.

Appendix C

Five Mile Radius

Restricted Flight Areas

Tucson, Arizona

Metro Area/East Pima

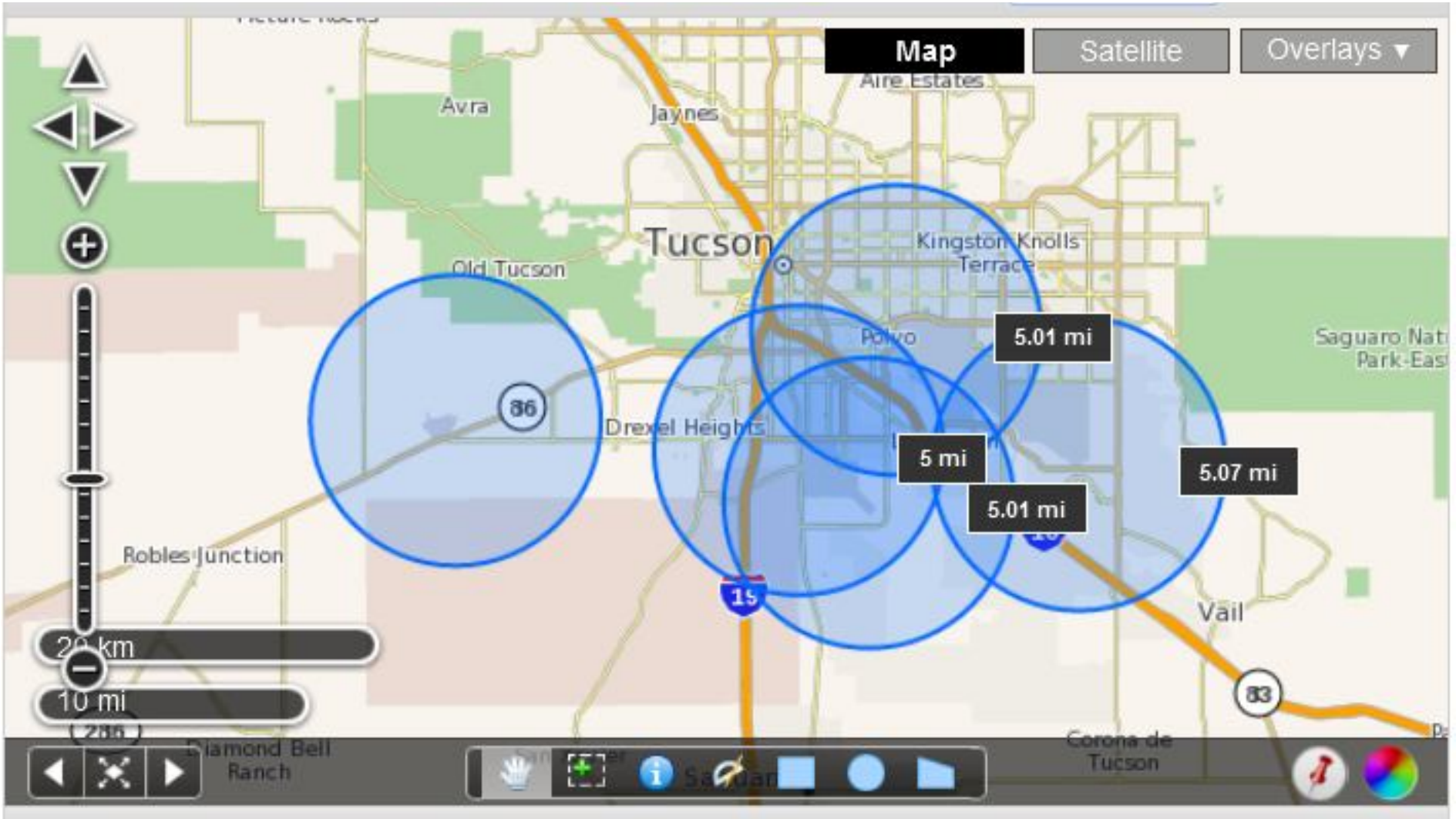
Map
Satellite
Overlays
Avra
Jaynes
Aire Estates
Tucson
Kingston Knolls
Terrace
Old Tucson
Polvo
Saguaro Nat
Park-East
5.01 mi
5 mi
5.01 mi
5.07 mi
Drexel Heights
Robles Junction
Vail
Corona de
Tucson
Diamond Bell
Ranch
10 mi

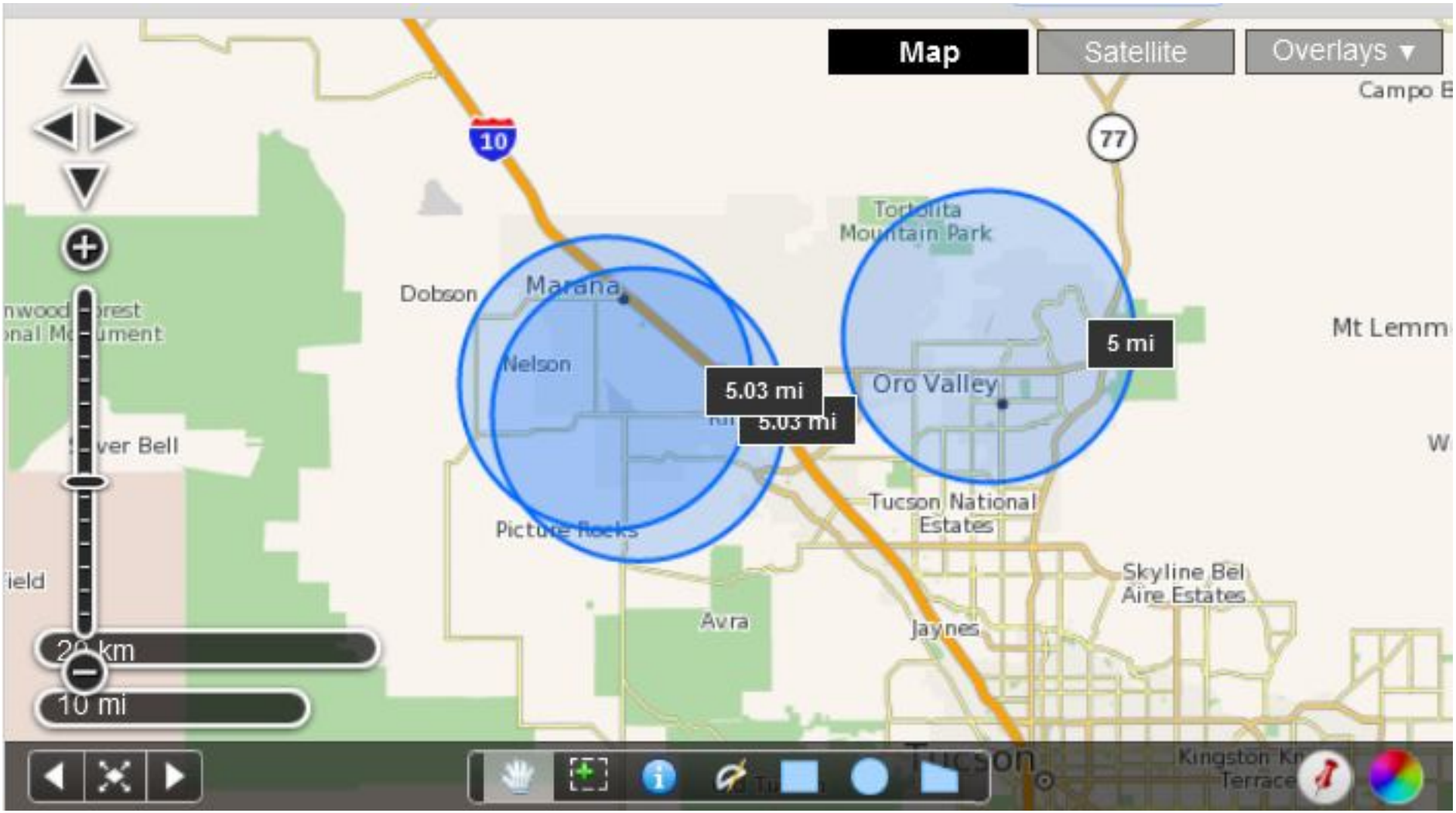
Map
Satellite
Overlays
10
77
Dobson
Marana
Nelson
Oro Valley
5.03 mi
5.03 mi
5 mi
Tortolita Mountain Park
Mt Lemm
Tucson National Estates
Picture Rocks
Avra
Jaynes
Skyline Bel Aire Estates
Tucson
10 mi

Appendix D

Douglas Trudeau

Personal Protocols and Controls

Protocols and Controls
Aerial Community and Real Estate Videos

Safety for public on the ground as well as manned aircraft above is an essential and utmost consideration for aerial videos and photography. As such, safety protocols and controls must be implemented through pre-flight preparation and during flight.

Pre-Flight Protocol:

- Check batteries with voltage meter to insure fully charged and ready for use.
- Inspect batteries for damage or leakage that may affect proper operation.
- Inspect propellers for cracks, chips or damage that may cause sudden loss of propulsion or unmanageable/uncontrolled flight.
- Check weather forecasts for wind advisory or other conditions that my impact flight.
- Consult five (5) mile radius map for airport vicinity.
    - Contact respective airport to advise of estimated flight time, estimated flight duration, estimated elevation of flight, and any other pertinent information.
- Inspect flight area for
    - vicinity of public safety helipads/heliports
    - vicinity of medical helipads/heliports
    - vicinity of light poles
    - vicinity or utility wires
    - vicinity of trees
    - flocks of birds that may cause interference and potential flight impact
    - vicinity of any elevated obstructions that may pose potential flight hazard
    - vicinity of roadways with moderate to heavy traffic that can be distracted
    - public gatherings that may attract viewers
    - optional point of control for best visual site of UAS while in flight
- Takeoff and landing
    - inspect area for best and safest point of takeoff and landing
    - if in a subdivision or area that is within 150 feet of a residential street, post warning sign(s)/stand(s) "Attention Aerial Photography In Progress - Remain Back 150 Feet "

Flight Protocol:

- takeoff and land from same location
- remain alert to birds, sound or aircraft, curious public, and approaching vehicles
- do not allow anyone to engage in conversation or distract the remote control pilot
- restrict flight to minimal elevation sufficient to acquire desired results
- remained prepared for emergency landing at all times
- pay attention to flight time
    - if possible set a timer as a safety alert
- land UAS and shut down propulsion immediately following landing

Post flight:

a. disconnect battery to prevent accidental activation of propulsion system
b. secure UAS in a safe location
c. remove all warning signs from public access areas

Emergency or Suspected Hazard:

- Immediate land UAS at safest and closet ground location in the event
  - manned aircraft is heard or seen in vicinity of flight
  - there is a public gathering within established safety boundary wanting to observe flight
  - pilot is being distracted from focusing on flight and safety
  - sudden change in weather (wind bursts)
  - sudden increase in vehicular traffic in vicinity of flight
  - birds enter into proximity of flight
  - any sudden unsafe event that can cause collision, distraction or interruption of control

Appendix E

Douglas Trudeau

Safety/Flight Manual

Safety Flight Manual

Aerial Community and Real Estate Videos

Safety for public on the ground as well as manned aircraft above is an essential and utmost consideration for aerial videos and photography. Maintaining a record of safe flight for FAA request and for determining future UAS safety protocols is imperative.

Date:_____ Location: _____

Pre-flight Inspection: □ Yes □ No Comment: _____

Elements	(circle)	(circle)	Comment
Weather	Good	Fair	
Visibility	Good	Fair	
Wind Speed	Low	Medium	

Proximity to airport: _____ (see attached map pinpointing approximate location of flight)
Airport notified □ Yes □ No Date:_____ Time: _____
Phone Number: _____ Contact Name: _____

Nearest major intersection: _____

Proximity to medium traffic road: _____

Proximity to heavily traveled roadway road: _____

Proximity to congested population: _____

Approx. Takeoff Time	
Approx. Landing Time	
Estimated Elevation	

Safety Concerns:

Additional Comments:

Unedited flight video/photos available for FAA upon written request within 180 days of flight: □ Yes □ No