Marek Management, LLC
122 Euclid St., Pensacola, FL 32503
(904) 705-2698 • marekmanagement@gmail.com

October 24, 2014

U.S. Department of Transportation, Docket Operations, M-30
1200 New Jersey Avenue, SE.
Room W12-140, West Building Ground Floor
Washington DC 20590-0001

RE: Marek Management, LLC Petition for Exemption under Section 333 of the FAA Modernization and Reform Act of 2012

To Whom It May Concern,

Marek Management, LLC seeks exemption as guided by the Secretary of Transportation authority under Section 333, *Special Rules for Certain Unmanned Aircraft Systems,* of the FAA Modernization and Reform Act of 2012, Public Law 112-95, February 14, 2012. Marek Management seeks to operate small Unmanned Aircraft Systems (sUAS)s for commercial purposes to provide services to production industries. As outlined by Enclosures A (Marek Management General Operations Manual) and B (Marek Management Skyward 1 Operations Manual), Marek Management sUAS operations pose no threat or hazard to the U.S. National Airspace System (NAS).

With the approval of a Section 333 exemption and adhering to the guidelines set forth in Enclosures A and B, Marek Management seeks to conduct sUAS mapping services and sensor deployment for the mining, agriculture, and mineral exploration industries. Enclosures A and B are Marek Management proprietary documents outlining sUAS procedural detail.

In reference to Title 14 CFR, Part 91, the following sections are sought for exemption: 61.113 (a) and (b), 91.113 (b), 91.119 (c), 91.121 (a), 91.151 (a) (1), 91.405 (a), 91.407 (a) (1), 91.409 (a), 91.417 (a) and (a):

SECTION 61.113 (A) AND (B) PRIVATE PILOT PRIVILEGES AND LIMITATIONS: PILOT IN COMMAND.

(a) Except as provided in paragraphs (b) through (h) of this section, no person who holds a private pilot certificate may act as pilot in command of an aircraft that is carrying passengers or property for compensation or hire; nor may that person, for compensation or hire, act as pilot in command of an aircraft.

(b) A private pilot may, for compensation or hire, act as pilot in command of an aircraft in connection with any business or employment if:

(1) The flight is only incidental to that business or employment; and

(2) The aircraft does not carry passengers or property for compensation or hire.

Marek Management seeks exemption from this section due to a commercial pilot license inability to advance the sUAS's Pilot in Command (PIC) to perform their duties safer. The PIC qualification process set forth in Enclosure A, Chapter 2 provides the adequate training and FAA prerequisites required for a sUAS PIC to operate safely in the NAS.

To seek exemption under section 61.113 (a) and (b), Marek Management seeks to conduct operations under guidelines set forth in Enclosure A. Outlined in Enclosure A sections 1.4, 1.5, 2.1, 2.2, 2.3, 2.4, 2.5, 2.6, 2.7, 2.8, 3.2, 3.6, 3.13, 3.15, 3.16, 4.2, 4.3, and 4.4, Marek Management seeks exemption by adhering to the following: a mandated Certificate of Authorization (COA), FAR/AIM and NOTAM requirement, minimum crew composition of PIC and Visual Observer (VO), PIC and VO qualification requirements, operations limited to Class G Airspace below 400 feet AGL, PIC Visual Line of Sight (VLOS), minimum separation requirements with manned objects, separation procedures, NOTAM issuance, local Flight Standards District Office (FSDO) approval, and required documentations during operations. Specific operating procedures and emergency procedures are set forth in Enclosure B Chapters 2 and 3, respectively.

SECTION 91.113 (B) RIGHT-OF-WAY RULES: EXCEPT WATER OPERATIONS.

(b) General. When weather conditions permit, regardless of whether an operation is conducted under instrument flight rules or visual flight rules, vigilance shall be maintained by each person operating an aircraft so as to see and avoid other aircraft. When a rule of this section gives another aircraft the right-of-way, the pilot shall give way to that aircraft and may not pass over, under, or ahead of it unless well clear.

Marek Management seeks exemption from this section due to the inability for an Unmanned Aircraft (UA) to accommodate a person inside the aircraft to see and avoid. To seek exemption under section 91.113 (b), Marek Management seeks to conduct operations under guidelines set forth in Enclosure A. Outlined in Enclosure A sections 2.1, 3.2, 3.15, and 3.16, Marek Management seeks exemption by adhering to the following: minimum crew composition of PIC and VO, PIC and VO qualification requirements, VLOS, minimum separation requirements with manned objects, and separation procedures. Specific operating procedures and emergency procedures are set forth in Enclosure B Chapters 2 and 3, respectively.

SECTION 91.119 (C) MINIMUM SAFE ALTITUDES: GENERAL.

Except when necessary for takeoff or landing, no person may operate an aircraft below the following altitudes:

(c) Over other than congested areas. An altitude of 500 feet above the surface, except over open water or sparsely populated areas. In those cases, the aircraft may not be operated closer than 500 feet to any person, vessel, vehicle, or structure.

Marek Management seeks exemption from this section due to UAs operating below 400 feet AGL. To seek exemption under section 91.119 (c), Marek Management seeks to conduct operations under guidelines set forth in Enclosure A. As outlined in Enclosure A sections 2.6, 3.1, 3.6 and 3.15, Marek Management seeks exemption by adhering to the following: PIC qualification requirements, altitude restrictions, operations limited to Class G Airspace below 400 feet AGL, minimum separation requirements with manned objects, and separation procedures. Specific operating procedures and emergency procedures are set forth in Enclosure B Chapters 2 and 3, respectively.

SECTION 91.121 (A) ALTIMETER SETTINGS.

(a) Each person operating an aircraft shall maintain the cruising altitude or flight level of that aircraft, as the case may be, by reference to an altimeter that is set, when operating--

(1) Below 18,000 feet MSL, to--

(i) The current reported altimeter setting of a station along the route and within 100 nautical miles of the aircraft;
(ii) If there is no station within the area prescribed in paragraph (a)(1)(i) of this section, the current reported altimeter setting of an appropriate available station; or
(iii) In the case of an aircraft not equipped with a radio, the elevation of the departure airport or an appropriate altimeter setting available before departure[.]

Marek Management seeks exemption from this section due to the inability to carry a barometric altimeter onboard the UA. To seek exemption under section 91.121 (a), Marek Management seeks to conduct operations under guidelines set forth in Enclosure A. Outlined in Enclosure A section 3.7, Marek Management seeks exemption by adhering to the GPS altitude requirements set forth in Enclosure A. Specific operating procedures and emergency procedures are set forth in Enclosure B Chapters 2 and 3, respectively.

SECTION 91.151 (A) (1) FUEL REQUIREMENTS FOR FLIGHT IN VFR CONDITIONS.

(a) No person may begin a flight in an airplane under VFR conditions unless (considering wind and forecast weather conditions) there is enough fuel to fly to the first point of intended landing and, assuming normal cruising speed—

(1) During the day, to fly after that for at least 30 minutes[.]

Marek Management seeks exemption from this section due to the UA's use of battery power vice fuel; therefore, the fuel requirement set forth in this section is not attainable. To seek exemption under section 91.151 (a) (1), Marek Management seeks to conduct operations under guidelines set forth in Enclosure A. Outlined in Enclosure A sections 3.1, 3.3, 3.4, 3.5, 3.6, 3.13, 3.14, and 3.15, Marek Management seeks exemption by adhering to the following: UA weight, UA speed limitation, altitude restrictions, weather minimum requirements, prohibited night operations, reviewing NOTAMs, operations limited to Class G Airspace below 400 feet AGL, PIC VLOS, battery health monitoring, and minimum separation requirements with manned objects. Specific normal operating procedures and emergency procedures are set forth in Enclosure B Chapters 2 and 3, respectively.

SECTION 91.405 (A) MAINTENANCE REQUIRED.

Each owner or operator of an aircraft—

(a) Shall have that aircraft inspected as prescribed in subpart E of this part and shall between required inspections, except as provided in paragraph (c) of this section, have discrepancies repaired as prescribed in part 43 of this chapter[.]

Marek Management seeks exemption from this section due to sUAS maintenance not defined in the Code. To seek exemption under section 91.405 (a) (1), Marek Management seeks to conduct operations under guidelines set forth in Enclosure A. Outlined in Enclosure A sections 6.1, 6.2, 6.3, and 6.4, Marek Management seeks exemption by adhering to the following: a maintenance program, technician qualifications, maintenance records, and utilizing functional check flights. Specific maintenance operations are set forth in Enclosure B Chapter 4, Service and Handling.

SECTION 91.407 (A) (1) OPERATION AFTER MAINTENANCE, PREVENTIVE MAINTENANCE, REBUILDING, OR ALTERATION.

(a) No person may operate any aircraft that has undergone maintenance, preventive maintenance, rebuilding, or alteration unless—

(1) It has been approved for return to service by a person authorized under Sec. 43.7 of this chapter[.]

Marek Management seeks exemption from this section due to sUAS maintenance not defined in the Code. To seek exemption under section 91.407 (a) (1), Marek Management seeks to conduct operations under guidelines set forth in Enclosure A. Outlined in Enclosure A sections 6.1, 6.2, and 6.4, Marek Management seeks exemption by adhering to the following: a maintenance program, technician qualifications, and utilizing functional check flights. Specific maintenance operations are set forth in Enclosure B Chapter 4, Service and Handling.

SECTION 91.409 (A) INSPECTIONS.

(a) Except as provided in paragraph (c) of this section, no person may operate an aircraft unless, within the preceding 12 calendar months, it has had--

(1) An annual inspection in accordance with part 43 of this chapter and has been approved for return to service by a person authorized by Sec. 43.7 of this chapter; or

(2) An inspection for the issuance of an airworthiness certificate in accordance with part 21 of this chapter. No inspection performed under paragraph (b) of this section may be substituted for any inspection required by this paragraph unless it is performed by a person authorized to perform annual inspections and is entered as an "annual" inspection in the required maintenance records.

Marek Management seeks exemption from this section due to sUAS maintenance not defined in the Code. To seek exemption under section 91.409 (a), Marek Management seeks to conduct operations under guidelines set forth in Enclosure A. Outlined in Enclosure A sections 6.1, 6.2, and 6.4, Marek Management seeks exemption by adhering to the following: a maintenance program, technician qualifications, and utilizing functional check flights. Specific maintenance operations are set forth in Enclosure B Chapter 4, Service and Handling.

SECTION 91.417 (A) AND (B) MAINTENANCE RECORDS.

(a) Except for work performed in accordance with Sec. 91.411 and Sec. 91.413, each registered owner or operator shall keep the following records for the periods specified in paragraph (b) of this section:

(1) Records of the maintenance, preventive maintenance, and alteration and records of the 100-hour, annual, progressive, and other required or approved inspections, as appropriate, for each aircraft (including the airframe) and each engine, propeller, rotor, and appliance of an aircraft. The records must include—

(i) A description (or reference to data acceptable to the Administrator) of the work performed; and
(ii) The date of completion of the work performed; and
(iii) The signature, and certificate number of the person approving the aircraft for return to service.

(2) Records containing the following information:

(i) The total time in service of the airframe, each engine, each propeller, and each rotor.
(ii) The current status of life-limited parts of each airframe, engine, propeller, rotor, and appliance.
(iii) The time since last overhaul of all items installed on the aircraft which are required to be overhauled on a specified time basis.

(iv) The current inspection status of the aircraft, including the time since the last inspection required by the inspection program under which the aircraft and its appliances are maintained.
(v) The current status of applicable airworthiness directives (AD) and safety directives including, for each, the method of compliance, the AD or safety directive number and revision date. If the AD or safety directive involves recurring action, the time and date when the next action is required.
(vi) Copies of the forms prescribed by Sec. 43.9(d) of this chapter for each major alteration to the airframe and currently installed engines, rotors, propellers, and appliances.

(b) The owner or operator shall retain the following records for the periods prescribed:

(1) The records specified in paragraph (a)(1) of this section shall be retained until the work is repeated or superseded by other work or for 1 year after the work is performed.

(2) The records specified in paragraph (a)(2) of this section shall be retained and transferred with the aircraft at the time the aircraft is sold.

(3) A list of defects furnished to a registered owner or operator under § 43.11 of this chapter shall be retained until the defects are repaired and the aircraft is approved for return to service.

Marek Management seeks exemption from this section due to sUAS maintenance not defined in the Code. To seek exemption under section 91.417 (a) and (b), Marek Management seeks to conduct operations under guidelines set forth in Enclosure A. Outlined in Enclosure A section 6.3, Marek Management seeks exemption by adhering to the maintenance record requirement. Specific maintenance record requirements are set forth in Enclosure B Chapter 4, Service and Handling.

In reference to Title 14 CFR, Part 21, subpart H, Airworthiness Certificates, Marek Management seeks an exemption. Marek Management seeks exemption from this subpart due to the UA's weight, speed, and operating area limitations. To seek exemption under subpart H, Marek Management seeks to conduct operations under guidelines set forth in Enclosure A. As outlined in Enclosure A sections 1.4, 3.1, 3.6, 3.8, 3.9, and 3.10, Marek Management seeks exemption by adhering to the following: COA requirement, weight limitations, speed limitations, operating area limitations, and flight computer capabilities. Specific operating procedures and emergency procedures are set forth in Enclosure B Chapters 2 and 3, respectively.

The operation of Marek Management sUAS seeks to provide production services to miners, farmers, and geologist that currently collect production data by manned aircraft or ground vehicles. Marek Management sUAS near real-time aerial surveillance in the mining, agriculture, and mineral exploration industries seeks to provide complete production information, improved decision making, leading to reduced production costs. By utilizing Marek Management sUAS services, manned flights are reduced or eliminated, freeing up controlled airspace and manned aircraft operating at low altitudes to collect similar data. When compared to ground collections, the sUAS collects data more quickly and efficiently than ground vehicles. Marek Management UAs can penetrate areas without disturbing the environment, while ground vehicles would either

be unable to reach these areas or dramatically alter the environment in order to collect similar data.

By utilizing Marek Management sUAS services, the cost to obtain aerial data in remote settings is dramatically reduced when compared to the current manned services providing similar data collections. A successful grant of exemption from sections 61.113 (a) and (b), 91.113 (b), 91.119 (c), 91.121 (a), 91.151 (a) (1), 91.405 (a), 91.407 (a) (1), 91.409 (a), 91.417 (a) and (a) from Title 14 CFR, Part 91 and subpart H of Part 21 would allow the utilization of Marek Management sUAS services to safely operate in the mining, agriculture, and mineral exploration industries.

The sUAS procedures outlined in Enclosures A and B demonstrate Marek Management's level of safety to be at least equal to or better than manned aircraft conducting similar operations. Marek Management is committed to a culture of safety in all phases of sUAS operations. Safety is the highest priority and is addressed and emphasized throughout Marek Management operating manuals (Enclosures A and B) and training. Chapter 5 of Enclosure A provides the safety protocols utilized by Marek Management. Enclosure B integrates safety procedures as a critical component of normal operating procedures, emergency procedures, and servicing.

Marek Management sincerely thanks the FAA for consideration of this request for exemption as outlined by Section 333 of the FAA Modernization and Reform Act of 2012. Should you need to contact me, I can be reached by e-mail at marekmanagement@gmail.com or by phone at (904) 705-2698.

Sincerely,

Jon Marek
President, Marek Management, LLC

Enclosures:
(A) Marek Management General Operations Manual
(B) Marek Management Skyward 1 Operations Manual

MAREK MANAGEMENT

GENERAL OPERATIONS MANUAL

VERSION 0
2014

THIS PAGE INTENTIONALLY LEFT BLANK

RECORD OF CHANGES

Change Number	Date of Entry	Remarks	Verified by Signature

THIS PAGE INTENTIONALLY LEFT BLANK

TABLE OF CONTENTS

RECORD OF CHANGES iii
TABLE OF CONTENTS v
TABLE OF FIGURES vii

CHAPTER ONE - GUIDANCE 1-1

1.1 GENERAL 1-1
1.2 MAKE/MODEL OPERATIONS MANUALS AND CHECKLISTS 1-1
1.3 FAA EXEMPTIONS 1-1
1.4 CERTIFICATE OF AUTHORIZATION 1-3
1.5 FAR/AIM AND NOTAM REQUIREMENT 1-3
1.6 WARNINGS, CAUTIONS, AND NOTES 1-4
1.7 TERMS 1-4
1.8 ISSUING CHANGES 1-5

CHAPTER TWO - QUALIFICATION PROGRAM 2-1

2.1 CREW COMPOSITION 2-1
2.2 QUALIFICATION PROCESS 2-2
2.3 LEAD INSTRUCTOR-EVALUATOR PIC/
LEAD INSTRUCTOR-EVALUATOR VO 2-2
2.4 INSTRUCTOR PIC/INSTRUCTOR VO 2-3
2.5 PIC EVALUATOR/VO EVALUATOR 2-3
2.6 PIC QUALIFICATION 2-3
2.7 VO QUALIFICATION 2-7
2.8 ADMINISTRATIVE REQUIREMENTS 2-8

CHAPTER THREE - OPERATING PROCEDURES 3-1

3.1 AIRCRAFT RESTRICTIONS 3-1
3.2 CREW STRUCTURE 3-1
3.3 WEATHER REQUIREMENTS 3-2
3.4 NIGHT FLIGHTS 3-2
3.5 REVIEWING NOTAMS 3-2
3.6 OPERATING AIRSPACE 3-2
3.7 ALTIMETER REQUIREMENTS 3-3
3.8 FLIGHT COMPUTER 3-4
3.9 FAIL SAFES 3-5
3.10 LOSS OF LINK OR GPS 3-6
3.11 PREFLIGHT PLANNING 3-7
3.12 MINIMUM ESSENTIAL CRITERIA 3-7
3.13 OPERATING RESTRICTIONS 3-7
3.14 BATTERY OPERATIONS/ENDURANCE 3-8
3.15 SEPARATION PROCEDURES 3-8
3.16 SEE AND AVOID 3-9

CHAPTER FOUR - FLIGHT AUTHORIZATION AND RECORDS.....4-1

4.1 AIRCRAFT MARKINGS 4-1
4.2 NOTAM REQUIREMENT.....4-1
4.3 LOCAL FLIGHT STANDARDS DISTRICT OFFICE 4-1
4.4 REQUIRED DOCUMENTATION.....4-1
4.5 RADIO FREQUENCY SPECTRUM 4-2
4.6 FLIGHT LOGBOOKS 4-2
4.7 REPORTING INCIDENTS AND ACCIDENTS 4-2

CHAPTER FIVE - SAFETY.....5-1

5.1 INTRODUCTION 5-1
5.2 CREW AND RISK MANAGEMENT 5-1
5.3 BATTERY SAFETY 5-2
5.4 SAFETY HANDLING OF UNMANNED AIRCRAFT 5-4

CHAPTER SIX - MAINTENANCE.....6-1

6.1 MAINTENANCE PROGRAM 6-1
6.2 TECHNICIAN QUALIFICATION 6-2
6.3 MAINTENANCE RECORDS 6-3
6.4 FUNCTIONAL CHECK FLIGHTS 6-4

APPENDIX - ACRONYMS.....A-1

TABLE OF FIGURES

FIGURE 2-1 STUDENT PIC GROUND SCHOOL.....2-4
FIGURE 2-2 STUDENT PIC FLIGHT EVENTS.....2-5
FIGURE 2-3 PIC ANNUAL REQUIREMENTS.....2-6
FIGURE 2-4 STUDENT VO GROUND SCHOOL.....2-7
FIGURE 2-5 STUDENT VO FLIGHT EVENTS.....2-7
FIGURE 2-6 VO ANNUAL REQUIREMENTS.....2-8

FIGURE 3-1 FLIGHT MODES.....3-4

FIGURE 4-1 FREQUENCY UTILIZATION.....4-2

FIGURE 6-1 STUDENT TECHNICIAN SCHOOL.....6-2

THIS PAGE INTENTIONALLY LEFT BLANK

CHAPTER 1
GUIDANCE

1.1 GENERAL

This document presents the standard operating procedures to be conducted by all Marek Management (MM) operated small Unmanned Aerial Systems (sUAS)s. This manual governs all procedures conducted by MM operators. MM conducts sUAS mapping services and sensor deployment for the mining, agriculture, and mineral exploration industries.

1.2 MAKE/MODEL OPERATIONS MANUALS AND CHECKLISTS

Each Unmanned Aircraft (UA) platform has its own make/model operations manual referred to as the "operating manual" that cover specific procedures for the associated platform. These operating manuals are organized in the following manner:

1. Overview of the Aircraft
2. Normal Procedures
3. Emergency Procedures
4. Service and Handling

The appropriate operating manual for the associated platform must be thoroughly understood by the operator in order to have a professional level of knowledge to operate the platform safely and effectively.

Each operating manual is supplemented with a field use checklist for quick reference for time critical information to include normal procedures, emergency procedures, and operating limits. Each checklist derives content from its respective operating manual.

1.3 FAA EXEMPTIONS

MM sUAS operations shall adhere to applicable portions of Title 14 Code of Federal Regulations (CFR), Part 91; however, due to sUAS operations, exemptions are required before any operations may be launched in the U.S. National Airspace System (NAS).

In reference to Title 14 CFR, Part 91, the following exemptions from the Federal Aviation Administration (FAA) are required before operations commence in the U.S. NAS. These exemptions include:

1. SECTION 61.113 (A) AND (B): PRIVATE PILOT PRIVILEGES AND LIMITATIONS: PILOT IN COMMAND.

PENDING: Shall be governed by sections 1.4, 1.5, 2.1, 2.2, 2.3, 2.4, 2.5, 2.6, 2.7, 2.8, 3.2, 3.6, 3.13, 3.15, 3.16, 4.2, 4.3, and 4.4 of this manual.

2. SECTION 91.113 (B): RIGHT-OF-WAY RULES: EXCEPT WATER OPERATIONS

PENDING: Shall be governed by sections 2.1, 3.2, 3.15, and 3.16 of this manual.

3. SECTION 91.119 (C): MINIMUM SAFE ALTITUDES: GENERAL

PENDING: Shall be governed by sections 2.6, 3.1, 3.6, and 3.15 of this manual.

4. SECTION 91.121 (A): ALTIMETER SETTINGS.

PENDING: Shall be governed by section 3.7 of this manual.

5. SECTION 91.151 (A) (1): FUEL REQUIREMENTS FOR FLIGHT IN VFR CONDITIONS.

PENDING: Shall be governed by sections 3.1, 3.3, 3.4, 3.5, 3.6, 3.13, 3.14, and 3.15 of this manual.

6. SECTION 91.405 (A): MAINTENANCE REQUIRED.

PENDING: Shall be governed by sections 6.1, 6.2, 6.3, and 6.4 of this manual.

7. SECTION 91.407 (A) (1): OPERATION AFTER MAINTENANCE, PREVENTIVE MAINTENANCE, REBUILDING, OR ALTERATION.

PENDING: Shall be governed by sections 6.1, 6.2, and 6.4 of this manual.

8. SECTION 91.409 (A): INSPECTIONS.

PENDING: Shall be governed by sections 6.1, 6.2, and 6.4 of this manual.

9. SECTION 91.417 (A) AND (B): MAINTENANCE RECORDS.

PENDING: Shall be governed by section 6.3 of this manual.

NOTE

All MM sUAS operations are grounded pending the FAA's approval of exemptions.

In reference to Title 14 CFR, Part 21, the following exemptions from the Federal Aviation Administration (FAA) are required before operations commence in the U.S. NAS. These exemptions include:

1. SUBPART H: AIRWORTHINESS CERTIFICATES.

PENDING: Shall be governed by sections 1.4, 3.1, 3.6, 3.8, 3.9, 3.10 of this manual.

NOTE

All MM sUAS operations are grounded pending the FAA's approval of exemptions.

1.4 CERTIFICATE OF AUTHORIZATION

The Certificate of Authorization (COA) must be obtained before sUAS operations are conducted by MM. MM will adhere to all provisions dictated by the FAA's COA. In addition to the COA, MM will operate within the appropriate state and local requirements to operate UA platforms.

1.5 FAR/AIM AND NOTAM REQUIREMENT

The FAA ensures the safe, efficient, and secure use of the nation's airspace and promotes safety in air commerce and encourages the development of civil aeronautics while supporting national defense requirements. All MM sUAS operations will be conducted by the guidelines set forth by the Federal Aviation Regulations (FAR)/ Aeronautical Information Manual (AIM), the Notice to Airmen (NOTAM) system, and appropriate publications (e.g., Visual Flight Rules (VFR) sectional charts) when applicable. The only deviations allowed will be conducted in strict accordance with the FAR exemptions set forth in section 1.3 of this manual.

1.6 WARNINGS, CAUTIONS, AND NOTES

Throughout this instruction and make/model operating manuals, the following applies to the terms WARNING, CAUTION, and NOTE:

WARNING

A WARNING pertains to a procedure or condition that could cause severe injury or death, if not carefully followed.

CAUTION

A CAUTION pertains to a procedure or condition that could cause damage to equipment, if not carefully followed.

NOTE

A NOTE pertains to a procedure or condition that is essential for emphasis.

1.7 TERMS

Use of the following terms represents specific meanings in context of MM operating manuals.

1. "Shall" is used when a procedure is mandatory.

2. "Should" is used when a procedure is recommended.

3. "Land Immediately" is used during a condition when a landing must be performed immediately without regards to making it to a designated landing area.

4. "Land as Soon as Possible" is used during a condition when an immediate landing is needed, but can be delayed until reaching a designated landing area.

1.8 ISSUING CHANGES

For changes to technical and operating procedures, any operator or FAA Administrator can make a request. These requests are reviewed by the Lead Pilot in Command (PIC) Instructor-Evaluator who implements the appropriate change via a serialized change notice, which will be distributed to all users of the affected manual.

When a serialized change notice is distributed, the changes are implemented immediately by all operators of the manual affected and annotated with the appropriate Change sequence (e.g., Change 1) to the version of the operating manual.

Changes to a version may include either handwritten changes or whole page replacements. The change is annotated with a perpendicular black line in the outer margin, and the "Change" sequence annotated in the footer of the affected page. Each Change is annotated in the "Record of Changes" at the beginning of each operating manual.

A new version to an operating manual is distributed when the Lead PIC Instructor-Evaluator deems it necessary. A new version will be distributed when deemed more advantageous to serialized change notices. Once a new version is distributed, all applicable changes are implemented, and the change sequence restarted.

THIS PAGE INTENTIONALLY LEFT BLANK

CHAPTER TWO
QUALIFICATION PROGRAM

2.1 CREW COMPOSITION

The sUAS PIC and the Visual Observer (VO) are the minimum crew requirements for all sUAS operations conducted by MM. These two positions are the sUAS crew needed to successfully operate the sUAS safely and effectively in the NAS.

Pilot in Command

The PIC is defined as the pilot in control of the sUAS by means of direct radio link to the UA. The PIC directly controls the UA with a radio transmitter by Visual Line of Sight (VLOS).

Before a MM PIC designation, the following are required:

1. Obtained private pilot's certificate and remain current.

2. Obtained third-class medical certificate and remain current.

3. Obtained security screening from the Department of Homeland Security.

4. Completed a flight review specified in 14 CFR 61.56, when applicable.

5. Accumulated (and logged) at a minimum of 200 cycles (takeoff/landing) and 25 hours of total time operating any UA platform, and at least 10 hours logged as a PIC in a similar type (i.e., multi-rotor or fixed-wing).

6. Completed and remains current in the qualification process set forth in this document. The qualification process encompasses both knowledge and skills based tests.

7. Piloted the specific make/model for a minimum of five hours before operating in the NAS for commercial purposes.

8. Remained current in the make/model by performing three takeoff and landings within the preceding 90 days before operating in the NAS for commercial purposes.

The PIC is fully qualified after meeting FAA minimum requirements and the completion of the MM qualification process.

Visual Observer

The VO is a critical component to the success of each flight event. The VO's primary duty is to scan the airspace for airborne threats. These threats include manned platforms (e.g., fixed-wing aircraft, rotary aircraft, ultralights, paragliders, balloons, gliders, and airships) and unmanned phenomenon (e.g., birds, weather). The VO immediately notifies the PIC of the airborne threat, and the PIC shall conduct the appropriate action to avoid the airborne threat safely.

The VO is fully qualified after completing the MM qualification process.

2.2 QUALIFICATION PROCESS

The MM qualification process is conducted by both instructors and evaluators. The purpose of the instructor is to train the PIC or VO. The evaluator's position is not to train but rather evaluate objectively the PIC or VO's level of knowledge and skill. In addition, the evaluator sets the standard requirements to be designated a sUAS PIC or sUAS VO.

Each instructor and evaluator is designated in writing for the respective make/model for which the qualification has been achieved.

In addition to the instructor and evaluator qualifications, each PIC and VO is designated in writing for the appropriate make/model qualification achieved.

2.3 LEAD INSTRUCTOR-EVALUATOR PIC/LEAD INSTRUCTOR-EVALUATOR VO

The Lead Instructor-Evaluator PIC position is held by the most experienced and skilled PIC at MM. This person has demonstrated exceptional skill at operating the sUAS and shows superior skills in their ability to instruct. The Lead Instructor-Evaluator PIC has achieved the minimum requirements set forth in section 2.1 and the following:

1. Logged at least 150 total hours in UA platforms.

2. Logged at least 50 total hours in the make/model for the instructor designation.

The Lead Instructor-Evaluator PIC is also designated the Lead Instructor-Evaluator VO.

2.4 INSTRUCTOR PIC/INSTRUCTOR VO

This position is held by those individuals that show the aptitude to instruct and also posses the following:

1. Logged at least 75 total hours in UA platforms.

2. Logged at least 25 total hours in the make/model for the instructor designation.

Instructor PICs are designated Instructor VOs concurrently.

2.5 PIC EVALUATOR/VO EVALUATOR

This position is available to PICs that demonstrate superior knowledge and skill operating the UA platform. The PIC Evaluator/VO Evaluator conducts the annual check flights required by each PIC and VO. The prerequisite requirements to be an evaluator are the same as an instructor.

2.6 PIC QUALIFICATION

The student PIC begins training through a familiarization of this operating manual, and the appropriate make/model operating manual assigned. The appropriate syllabus for each respective make/model is set forth by the appropriate Curriculum Guide.

Each Curriculum Guide begins with a familiarization of systems, operating procedures, and FAA requirements for the respective UA. The student PIC is then be given a review and knowledge based exam. After the academic phase, a flight preparation course is conducted to prepare the student PIC for all phases of flight operations to include: event planning, Emergency Procedures (EP)s, preflight, execution, and post flight. Once completed with this level of ground school, the PIC under training enters the flight phase. Here the student is given thorough training to gain experience and proficiency in all aspects of the UA flight characteristics. A designated Instructor PIC conducts all training events.

NOTE

All training events are conducted with essential personnel (i.e. Instructor PIC and VO) and no other personnel allowed in the vicinity during training evolutions unless needed to successfully complete an event and with prior written consent by the individual.

WARNING

All training operations shall be conducted with an adequate safety buffer from people, vehicles, and structures.

Upon completion of the flight syllabus, the student PIC is given a check flight by a designated PIC Evaluator. Upon successfully completing this check flight, the student PIC is fully designated in writing and given the responsibility to operate the MM make/model UA.

NOTE

In addition to their initial syllabus requirements, all PICs are tested annually on their knowledge of the U.S. NAS and the UA's procedures and systems. Also, the PICs receive an evaluation of their skills with an annual check flight.

Below is a summary of the Curriculum Guide requirements for a MM UA PIC.

Lesson Description	Duration (hours)
Review of FAA Procedures	3.0
Intro to sUAS	2.0
FAA Regulations	2.0
Systems	3.0
Advanced Systems	5.0
Emergency Procedures	2.0
Maintenance	2.5
Operations	3.0
Safety and Crew & Risk Management	2.0
Review	2.0
Operations Exam	1.0
FAA Procedures Exam	1.0
Emergency Procedures Bold Face Test	0.5
Flight Preparation	5.0
Familiarization of the sUAS	2.0
Total Ground School	**36.0**

Figure 2-1 Student PIC Ground School

NOTE

All exams require an 80% or higher for a passing grade.

Lesson Description (number of events)	Duration (hours)
Familiarization Flight Events (20)	10.0
Systems Integration Flight Events (20)	10.0
Solo Flight Events (9)	4.5
Check Flight Event (1)	0.5
Total Flight Events (50)	**25.0**

Figure 2-2 Student PIC Flight Events

Each flight event is 30 minutes in duration, and EPs are emphasized on every flight. The familiarization flights stress proficiency with handling the UA and takeoff/landing proficiency.

NOTE

The student PIC achieves the majority of their flight cycle requirements during the Familiarization Flight phase.

NOTE

The student and instructor PIC utilize dual flight controls until the solo flight event block.

The systems integration flights develop the student PIC's ability to integrate fully the ground station with the UA and continue to build upon the student's experience. The solo flight events instill further confidence in the student PIC to operate the full system on their own. After the Instructor PIC supervised solo flight events, the student PIC receives a check flight by a PIC Evaluator.

Prior to the check flight, the student PIC receives an Operations Exam and FAA Procedures Exam. The Operations Exam evaluates the student's knowledge of this operating manual and the respective operating manual for the make/model of the UA being operated. The FAA Procedures Exam is a review exam of the PIC's knowledge from the Private Pilot test and emphasizes FAA procedures and requirements. These exams are a recurring annual requirement for all PICs.

The annual PIC requirements are shown in the figure.

Lesson Description	Duration (hours)
FAA Procedures Exam	1.0
Operations Exam	1.0
Emergency Procedures Bold Face Test	0.5
Crew Resource Management Training	1.5
Annual Evaluation Flight Event	0.5

Figure 2-3 PIC Annual Requirements

In addition to the annual exam requirements, each PIC undergoes an annual evaluation flight to ensure each PIC is performing to the standardization set forth by the FAA and the operating manuals.

Depending on the level of prior sUAS experience the operator under training may have a portion of their UA flight events waived. This decision is granted by the discretion of the Lead Instructor PIC and may waive up to 15 hours of the 25-hour flight syllabus.

NOTE

All PIC must log at least 10 flight hours for the type of UA (i.e. multirotor or fixed-wing) utilized for commercial operations.

Depending on the performance of the student PIC, additional training may be required in order to meet the minimum standard in order to progress in the training syllabus.

2.7 VO QUALIFICATION

The VO qualification is designated as a single qualification and is not designated to a specific make/model UA. The duties of the VO remain the same whether a multi-rotor or fixed-wing sUAS is airborne.

The following are required before a MM VO designation:

1. Successfully completed the FAA Procedures exam.

2. Conducted five hours of flight observation at a training facility with an instructor VO.

3. Completed the VO evaluation flight event.

The VO curriculum is summarized in the following figures and is expanded upon in the VO Curriculum Guide.

Lesson Description	Duration (hours)
Review of FAA Procedures	3.0
Intro to sUAS	2.0
FAA Regulations	2.0
Systems	3.0
Emergency Procedures	2.0
Operations	3.0
Safety and Crew & Risk Management	2.0
FAA Procedures Exam	1.0
Total Ground School	**18.0**

Figure 2-4 Student VO Ground School

Lesson Description (number of events)	Duration (hours)
Visual Observer Events (10)	5.0
Visual Observer Check Event (1)	0.5
Total Flight Events (11)	**5.5**

Figure 2-5 Student VO Flight Events

Each flight event is 30 minutes in duration and EPs are emphasized on each flight event. The VO flight events stress the importance of a good visual scan of the airspace and crew management with the PIC.

The annual VO requirements are shown in the figure.

Lesson Description	Duration (hours)
FAA Procedures Exam	1.0
Crew Resource Management Training	1.0
Visual Observer Annual Evaluation	0.5

Figure 2-6 VO Annual Requirements

In addition to the annual exam requirement, each VO undergoes an annual evaluation event to ensure each VO is performing to the standardization set forth by the FAA and the operating manuals.

2.8 ADMINISTRATIVE REQUIREMENTS

Each position attained is designated by letter to indicate the level of qualification achieved by each individual. Only individuals with a designation letter are able to operate in the designated position. To be considered fully qualified, each designation letter is maintained in each operator's record with other required documentation (e.g., private pilot certificate, third-class medical certificate, etc).

CHAPTER THREE
OPERATING PROCEDURES

3.1 AIRCRAFT RESTRICTIONS

All UAs in the MM inventory shall weigh less than 55 pounds fully loaded. The current weight of the heaviest UA is less than 10 pounds fully loaded with all systems. The UA maximum airspeed shall be less than 50 kts.

NOTE

No explosive materials or highly flammable liquids shall be carried onboard MM UAs.

The UA shall not be operated at an altitude that is hazardous to people or animals. The intentional over flight of people is strictly prohibited.

3.2 CREW STRUCTURE

The sUAS PIC and VO are the minimum crew requirements for all sUAS operations conducted by MM. These two positions must effectively communicate throughout each flight event while minimizing distractions. Proper coordination is vital to the successful execution of sUAS operations.

NOTE

At all times during the flight event, the PIC and VO shall be in verbal contact with each other.

Pilot in Command

The primary duty of the PIC is safety of flight as related to the remote control of the UA. The PIC shall make every effort to comply with all applicable portions of the Title 14 CFR, Part 91, FAR except where the FAA has granted exemptions or where maintaining safety of flight takes precedence. The PIC directs the VO as needed to conduct flight operations.

Visual Observer

The VO supports the PIC to accomplish see and avoid requirements and safely operate the UA in the NAS. The VO is utilized by the PIC as another set of eyes to locate VFR traffic.

3.3 WEATHER REQUIREMENTS

The PIC is responsible for being familiar with the weather in the operating area. Weather shall be obtained for the local area of operation to include Meteorological Aerodrome Reports (METAR)s and Terminal Area Forecasts (TAF)s from the closest airport reporting weather conditions. Additional weather information should be obtained from the National Oceanic Atmospheric Administration (NOAA) website (http://www.aviationweather.gov/adds/), to review the following: radar, ceiling/visibility, wind/temperatures, turbulence, Significant Meteorological Information (SIGMET), and icing.

The PIC should pay close attention to temperature, winds, turbulence, hazardous weather, and precipitation in order to properly plan the launch, flight profile, and recovery of the UA. Adverse weather conditions may degrade UA electronic systems and sensors.

All flight events shall operate in Visual Meteorological Conditions (VMC) only. The UA shall not operate in visibility less than 3 sm. The UA shall not operate 500 feet or less vertically (below) from clouds or 2,000 feet or less laterally from clouds. The UA shall never operate in actual icing conditions or forecasted icing during the time of the flight event.

3.4 NIGHT FLIGHTS

All night flight events are strictly prohibited. At the earliest, all flight operations commence 30 minutes after sunrise. All flight operations complete 30 minutes before sunset.

3.5 REVIEWING NOTAMS

All applicable NOTAMs shall be reviewed before each flight event. Also, Temporary Flight Restrictions (TFR)s shall be reviewed near the area of operation.

3.6 OPERATING AIRSPACE

All operations are conducted at 400 feet Above Ground Level (AGL) or lower inside Class G uncontrolled airspace. The airspace being utilized by the UA is restricted to private property, and the owner provides written consent to the operation of a MM UA.

VFR sectional charts shall be reviewed before any operations are conducted. The VFR sectional chart is used to ensure Class G airspace is being utilized and no other conflictions exist such as airports, Parachute Jump Area (PJA)s, Restricted Areas, Military Training Routes (MTR)s, Prohibited Areas, and any other restriction depicted on the VFR sectional chart.

Operations shall not be conducted within 5 nm of non-tower controlled airports unless a Letter of Agreement (LOA) is established for operations near the respective airport. In addition, operations shall not be conducted within 5 nm of active PJAs or Restricted Areas that extend from 1500 feet AGL or lower.

Operations shall not be conducted within 5 nm of the route corridor of MTRs unless proper coordination with the appropriate controlling authority is established and deconfliction is coordinated. In regards to route deconfliction, operations shall be conducted within plus or minus 30 minutes of the scheduled block for route points of the respective MTR.

Prohibited Areas and TFRs shall be avoided by 5 nm. All other restrictions depicted on the VFR sectional chart, not identified as airports, PJA, Restricted Areas, MTRs, or Prohibited Areas shall be avoided by 3 nm.

3.7 ALTIMETER REQUIREMENTS

The UA's primary means for altitude measurement is a Global Positioning System (GPS) triangulated altitude. This GPS altitude is generated from the GPS aided flight computer and verified by the PIC during preflight operations. The altitude is expressed in AGL, and all operations shall remain below 400 feet AGL. The PIC may initiate a zero altitude point during prelaunch procedures. This GPS altitude is continually transmitted to the ground station via a telemetry data feed. The PIC monitors the UA to ensure the 400 feet AGL ceiling is never violated.

NOTE

In the case the UA operates well below 400 feet AGL, the GPS altitude data feed readout is not required. The GPS altitude data feed readout is required when the aircraft operates above 330 feet AGL.

3.8 FLIGHT COMPUTER

The UA utilizes a sophisticated flight computer that integrates advanced processors, accelerometers, gyroscopes, magnetometer, barometer, compass, and GPS.

The primary modes of operation for the flight computer include a manual mode, assisted flight modes, autonomous mode, and commanded modes. The transmitter commands these modes.

The following figure shows the six flight modes available to MM UA.

Primary Mode	Flight Mode
Manual	Manual
Assisted	Stabilize
Assisted	Fly by Wire
Autonomous	Autonomous
Commanded	Loiter
Commanded	Return to Land

Figure 3-1 Flight Modes

NOTE

The six flight modes are independent of the ground station. The transmitter executes all flight modes.

Manual Mode

The Manual Mode provides the most raw operator inputs to the UA from the transmitter. The operator has no assistance from the flight computer to maintain strait and level flight. This mode allows for the operator to have full control of the UA. No GPS is required to use this mode of operation.

Stabilize Mode

The Stabilize Mode provides an assisted autopilot function for the operator. This mode returns the aircraft to level after the roll and pitch control are released on the transmitter. This mode provides an added level of stability to keep the aircraft in level flight. No GPS is required to use this mode of operation.

Fly by Wire

The Fly by Wire Mode provides an assisted autopilot function for the operator. If the UA desires to go right, then banking right maintains level while going right. If the UA is pitched down, then the UA pitches down until released. This mode provides an even higher level of stability than the Stabilize Mode. No GPS is required to use this mode of operation.

Autonomous

The Autonomous Mode places the UA into a preplanned route that has been uploaded to the flight computer. This preplanned route can be independently uploaded or can be uploaded via telemetry. GPS is required to use this mode of operation.

Loiter

The Loiter Mode is a commanded mode to set the aircraft into a circling pattern with a 200 ft radius. The circle pattern can be adjusted by moving the transmitter stick or telemetry. GPS is required to use this mode of operation.

Return to Land

The Return to Land Mode is a commanded mode that returns the UA to its point of departure (first position of GPS lock). This mode returns the aircraft direct to the landing area and places the UA into a circling pattern at an altitude of 330 feet AGL. GPS is required to use this mode of operation.

3.9 FAIL SAFES

Each UA incorporates various fail-safe conditions that include the loss of link, loss of GPS, and low battery voltage. In addition to these fail safes, geofencing can be utilized to ensure an aircraft does not fly outside an area's boundary.

Loss of Link

In the event the transmitter loses its connection with the aircraft, the UA returns to the landing area and orbits. The PIC conducts the appropriate loss of link EP for the make/model UA.

Loss of GPS

When GPS lock is lost for 3 seconds, the UA automatically switches to Loiter Mode until the signal is regained. If the signal is regained, then the UA continues its flight plan. In the event the GPS does not acquire a position after 20 seconds, the aircraft conducts dead reckoning until the signal is regained. In the case where the GPS position is permanently lost, the PIC of the UA conducts the proper make/model EP.

Low Battery Voltage

If the battery voltage drops below 33%, the UA returns to land position and orbits. The PIC conducts the appropriate make/model low battery voltage EP.

Geofencing

For geofencing, boundaries are set using the event planning software. In addition to geographical boundaries being set, floors and ceiling can be set as well. If the UA goes outside the UA boundary, the UA returns to a predetermined guide point, at a set altitude, and loiters until commanded otherwise. This predetermined guide point is typically set near the center of the operating area.

For all MM flight events, a geofenced boundary should be set around the operating area, and the ceiling set to 400 feet AGL.

3.10 LOSS OF LINK OR GPS

In the event the UA experiences a loss of link, the PIC shall make every attempt to reestablish the radio link to the UA. This may be accomplished through antenna adjustments or removing an obstacle blocking antenna transmission. Further guidance is given in the make/model operating manual.

The PIC or VO continually calls out verbal position reports of the UA as it conducts its return to land sequence. During the loss of link and if the link is never reestablished, the UA returns to land.

In the event the permanent Loss of GPS occurs, the mode of operation shall be switched to MANUAL or ASSISTED, and the PIC executes an unaided GPS mode to the designated recovery area. Further guidance is given in the make/model operating manual.

3.11 PREFLIGHT PLANNING

The PIC is responsible for all preflight planning to ensure the UA operates within its FAA exemptions and COA directives. The PIC ensures the UA is operating in the appropriate, authorized airspace (see section 3.6 for details of airspace operations). The PIC ensures the weather forecast is appropriate for the operation of the UA (see section 3.3 for details of weather requirements). The PIC checks the applicable NOTAMs and TFRs. Also, the PIC ensures the NOTAM for the associated UA flight event has posted.

Upon validation of the airspace, the PIC and VO survey the operating area to note all hazards (terrain, obstructions, structures, other hazards) in the vicinity of operations. The launch and landing areas are surveyed for potential obstructions that may interfere with the launch and recovery of the UA. The launch and landing zones designated and marked with bright orange markings.

NOTE

Electromagnetic Interference should be considered in order to prevent inadvertent lost link with the UA.

Upon completion of the preflight planning, the PIC shall conduct a preflight inspection of the UA and its ground control system, if applicable. The detail for this procedure is outlined in each respective make/model operating manual.

3.12 MINIMUM ESSENTIAL CRITERIA

The Minimum Essential Criteria (MEC) checklist shall be used before each flight event to ensure minimum criteria are met to launch the UA. The MEC is a tool for determining a go or no-go criteria. The MEC checklist addresses the following areas: airspace, VMC, winds, and temperatures.

3.13 OPERATING RESTRICTIONS

The PIC must maintain UA VLOS at all times with the use of unaided devices other than corrective lenses. A VO must be utilized during each flight event, and the PIC and VO must be able to verbally communicate.

NOTE

The operation of the UA shall never be conducted from a moving device or vehicle.

3.14 BATTERY OPERATIONS/ENDURANCE

The PIC shall ensure adequate battery power exists onboard the UA to successfully perform the flight event.

During flight events, the battery shall be monitored by a primary telemetry link and a secondary voltage alarm attached directly to the operating battery. The primary link indicates low voltage via audible warning on a ground station or transmitter. The secondary voltage alarm emits a loud alarm from the UA to indicate the battery is low, and the UA shall land as soon as possible.

Both primary and secondary alarms sound at 3.8 volts (50% capacity), and the aircraft lands as soon as possible. The Lithium-Polymer (LiPo) battery should never drop below 3.72 volts per cell due to its capacity reaching 25%.

CAUTION

Improper flight planning may cause the UA to fail reaching the designated landing area; therefore, proper event planning requires the PIC to plan the event with enough reserve battery power to achieve a safe recovery.

Battery health is vital to the success and safety of flight events. It is essential for each battery cell to be checked for its health before each launch of the UA. This check takes place during preflight and monitored via telemetry during the flight event.

3.15 SEPARATION PROCEDURES

The UA shall never intentionally fly over people, vehicles, vessels, and structures unless written consent is obtained by the individuals affected. The UA should avoid people on the ground by 500 feet laterally.

The UA shall avoid all manned aircraft by 1,000 feet vertically and 1 sm laterally within 1,000 feet vertically.

3.16 SEE AND AVOID

All manned airborne assets have the right of way to the UA. These manned systems include but are not limited to the following: fixed-wing, rotary, ultralights, paragliders, balloons, gliders, and airships. When a PIC or VO spots a manned aircraft within 1,000 feet vertically or 1 sm laterally within 1,000 feet vertically, the PIC commands a Return to Land Mode and maintains a safe altitude and distance from the manned aircraft. Upon returning to the landing area, the UA is recovered, and the situation of the manned aircraft assessed. Once the manned aircraft has cleared the area, the UA may relaunch to continue the flight event.

WARNING

Failure to recover an UA operating closely to manned aircraft, could lead to a possible mid-air collision.

In the event the manned aircraft has penetrated quickly and deep into the UA operating area, then the PIC shall land immediately.

THIS PAGE INTENTIONALLY LEFT BLANK

CHAPTER FOUR
FLIGHT AUTHORIZATION AND RECORDS

4.1 AIRCRAFT MARKINGS

All UAs shall have identification markings that are as large as practicable in accordance with 14 CFR part 45. The markings are identified by serial number, registered in accordance with 14 CFR part 47.

4.2 NOTAM REQUIREMENT

For all MM flight events, a NOTAM shall be requested and approved before flight operations commence. Each flight event must apply for a NOTAM within 72 hours but not later than 48 hours from the time of the flight event.

4.3 LOCAL FLIGHT STANDARDS DISTRICT OFFICE

Before the scheduled flight event, MM shall submit a written Plan of Activities to the local Flight Standards District Office (FSDO) with jurisdiction over the area of operation. At least 3 days prior to the operation, the request must be filed unless the notification is waived by the respective FSDO. The Plan of Activities must contain the following for each flight event:

1. Dates and times
2. Name and number of the person that received the grant of exemption
3. Name and number of the on-scene supervisor
4. Make/model and serial or N-number of the UA
5. Name and certificate number of the UA PIC
6. A statement by the property owners or local officials that give permission of the operation
7. A description of flight activity, to include charts and altitudes flown
8. Signature of exemption-holder

4.4 REQUIRED DOCUMENTATION

During sUAS operations, the PIC shall maintain the proper documents at the site to include private pilot certificate, aircraft registration certificate, general operating manual, the make/model operating manual, COA, and exemption letter.

4.5 RADIO FREQUENCY SPECTRUM

All radio transmissions for sUAS operations with MM comply with part 15 of the Federal Communication Commission (FCC) rules for frequency allocation. The radio frequency spectrums utilized are shown in the figure.

System	Frequency	Output
Radio Transmitter	2.4 to 2.4835 GHz	100 mW
Telemetry	915 MHz	100 mW

Figure 4-1 Frequency Utilization

4.6 FLIGHT LOGBOOKS

An accurate logbook of the flight event shall be kept by the PIC or the VO. Flight logbooks document PIC and VO flight time. In addition, aircraft landings logged for the PIC. The logbook contains date, flight time, landings, aircraft make/model, serial number, location, and signature

4.7 REPORTING INCIDENTS AND ACCIDENTS

Any incident, accident, or violation of operating space as defined by the COA shall be reported to the Unmanned Aircraft System (UAS) Integration Office within 24 hours of the incident.

Accidents shall be reported to the National Transportation Safety Board (NTSB) per its guidance. Further operations are grounded until the UAS Integration Office has reviewed and authorized operations.

CHAPTER FIVE
SAFETY

5.1 INTRODUCTION

Safety is paramount at MM and is briefed before all flight events. In addition to the daily briefings on safety, annual safety pauses are administered in order to highlight the importance of safety in the field and the air. These safety pauses enhance the safety culture within MM by stressing its importance by devoting attention to the subject as it relates to aviation safety in general and specifically sUAS operations within the NAS.

5.2 CREW AND RISK MANAGEMENT

All crews brief Crew Resource Management (CRM) before each flight event in order to increase flight event effectiveness, maximize coordination, and minimize preventable errors. In addition to CRM, the utilization of risk management is addressed as well before each flight event.

Crew Resource Management

CRM centers on human factors being the leading cause of aviation mishaps. CRM seeks to optimize human performance through proper crew coordination.

The flight event brief sets the tone for CRM by setting the professional atmosphere between crewmembers in order to effectively conduct flight operations.

NOTE

Once the flight event is briefed, the PIC and VO should maximize their attention to the flight operation, and minimize all other distractions not related to the flight.

This professional relationship continues during airborne operations by limiting distractions by utilizing sterile communications during flight events. This type of environment is required in order to minimize preventable errors due to non-event oriented conversations during flight operations. It is vital for clear channels to be open between the PIC and VO in order for time critical information to be relayed as quickly as possible.

During flight operations, non-crewmembers are kept a safe distance away in order to allow for complete crew coordination between the PIC and VO. The PIC and VO relationship is viewed as a flight deck environment during sUAS airborne operations; therefore, the relationship shall not be impeded by needless distractions by non-essential crewmembers and other distractions (i.e. television, radio, etc).

CRM training is established by an initial baseline during the student PIC/VO syllabus and subsequently administered as an annual recurrence qualification. CRM, a required flight event briefing item, is reinforced before each flight event and discussed during each debrief.

Risk Management

A risk management assessment is conducted before each UA launch, risk factors are addressed during each brief before each event. Crews are trained to utilize risk management skills throughout the flight event.

A risk management worksheet is filled out and signed by each PIC before each flight event. The worksheet identifies the hazards associated with PAVE (PIC, Aircraft, EnVironment, External pressures).

Risk management begins with each member of the crew making an assessment of their own personal risk by utilizing the IMSAFE (Illness, Medication, Stress, Alcohol, Fatigue, and Emotion) checklist. After identifying the hazards, the assessment continues with the aircraft, environment, and external pressures. If a level other than LOW is achieved during the risk assessment, then the flight event shall be canceled.

5.3 BATTERY SAFETY

The power source for all MM sUAS operations is electric motors driven by LiPo batteries. These batteries require safety awareness and proper handling to ensure the LiPo battery does not overheat and possibly catch fire.

WARNING

Failure to follow appropriate safety guidelines could lead to an overheated battery that may lead to a fire causing a potentially hazardous situation.

WARNING

Ensure any battery that is damaged is appropriately discarded. Damaged cells can create a condition where batteries can ignite and cause a fire causing a potential hazardous situation.

Charging procedures for LiPo batteries require only LiPo specific battery chargers, set to the appropriate cell count for the respective battery to be charged. Slow charges are recommended, and the balance of each cell should be kept relatively close to each cell. Care should be taken to avoid imbalances of each cell (i.e., do not allow individual cells to exceed 0.1 volts in comparison).

NOTE

In cases where cells must be balanced, attempt one balance and if it is unsuccessful, then carefully discharge the battery and properly dispose of the failed battery.

A metal or other non-combustible surface shall be used when recharging batteries. Special attention must be given during the first few minutes of charging to ensure proper charging has taken place. Batteries shall never be left unattended during a charging/discharging/balancing process. A well-ventilated area and a fire extinguishing agent should be within close proximity during battery charging/discharging/balancing process.

The LiPo battery shall never exceed 4.2 volts per cell. To allow the battery to discharge below 3.0 volts per cell, causes the battery irreversible damage. In the case of over discharge, the battery shall be disposed properly. For storage, the LiPo battery should be stored at 3.8 volts per cell (50% of the useful charge).

Batteries shall be stored in fire retardant woven fabric bags (LiPo Bags) at all times not in use. The storage shall be kept in a well-ventilated area, and temperatures should never exceed 130°F or the manufacturer recommendation, whichever is lower.

5.4 SAFETY HANDLING OF UNMANNED AIRCRAFT

It is strictly prohibited for human contact to be placed inside a propeller arc of a motor when the battery has been connected to the UA.

WARNING

While handling a UA near a propeller with a battery connected, an inadvertent throttle control switch movement, mode of operation switch, or electrical malfunction could cause an inadvertent rotation of the motor causing a propeller strike with human flesh.

If human contact must be made within the propeller arc, then all electrical power shall be eliminated in order to prevent inadvertent propeller strikes with human flesh.

CHAPTER SIX
MAINTENANCE

6.1 MAINTENANCE PROGRAM

The MM maintenance program seeks to ensure a proactive maintenance schedule that ensures vital UA components are properly inspected, overhauled, and retired at the appropriate time interval. This proactive maintenance program ensures that components do not materially fail when otherwise could have been prevented through a rigid maintenance schedule of inspections and overhauls. All MM make/model aircraft are thoroughly checked during daily operations, routine inspections, overhaul time intervals, and retired at the end of service life.

MM shall follow the manufacturer requirements for aircraft and components in regards to maintenance, overhaul, inspection, replacement, and life cycle. MM must operate at the level of the manufacturer requirement or more conservatively.

NOTE

MM shall adhere to any manufacturer safety bulletin.

When manufacturer requirements are not available, the make/model operating manual shall establish and identify these component requirements.

For each make/model operating manual, component requirements are outlined for the following:

1. Servos/actuators
2. Motor
3. Propeller
4. Electronic speed controller
5. Receiver
6. Flight computer
7. Batteries
8. Transmitter
9. Ground station

If abnormal conditions are discovered by the PIC during a preflight or postflight inspection, then the UA is grounded until maintenance is performed to remedy the situation. The maintenance performed shall be documented in the UA's maintenance record.

The make/model operating manual shall outline a record of the aircraft maintenance, preventative maintenance, overhaul of components, replacement parts, other alterations, and the total time in service. Only a designated technician is able to sign off the work performed on the UA.

6.2 TECHNICIAN QUALIFICATION

The sUAS technician is designated for each make/model. The student technician curriculum focuses on sUAS systems, maintenance procedures, and a performance lab that breaks down each component of the system in detail. After the completion of the syllabus, an exam tests the knowledge and skill of the student technician in regards to system integration and maintenance procedures.

NOTE

All exams require an 80% or higher for a passing grade.

Below is a summary of the Curriculum Guide requirements for a sUAS technician.

Lesson Description	Duration (hours)
Intro to sUAS	2.0
Systems	3.0
Advanced Systems	5.0
Maintenance	2.5
sUAS Lab	5.0
Maintenance Review	2.0
Maintenance Exam	1.0
Total Ground School	**20.5**

Figure 6-1 Student Technician School

A technician that demonstrates exceptional skill at maintaining the UA make/model and the ability to instruct will be designated an instructor technician.

6.3 MAINTENANCE RECORDS

The maintenance records contain the history and scheduled maintenance requirements for each MM make/model UA by serial number.

These records document preventive maintenance, alterations, daily inspections, routine inspections, overhaul, and time in service. Each record for the appropriate flight time interval is documented. The comprehensive maintenance history and future maintenance are documented in these records. These records include a description of the work performed, the date of completion, and a signature from a qualified technician.

Daily inspections ensure the UA is meeting an acceptable condition before flight events. A more through inspection is conducted through routine maintenance, which ensures the component is functioning properly at certain time intervals. Overhaul maintenance requires the aircraft component to be reworked or replaced. All inspections require a qualified technician to sign off the appropriate level of maintenance achieved, and the aircraft declared safe to fly.

Each major component is documented by serial number in each UA's maintenance record. These major components include:

1) Servos/actuators
2) Motor
3) Propeller
4) Electronic Speed Controller (ESC)
5) Receiver
6) Flight computer

For each serialized UA, the servos, motor, propeller, ESC, receiver, and flight computer will be documented in the maintenance record for each component's total time in service. In addition to the total time in service, the current status of life limited components are documented as well.

For inspection work for each component, the time since last overhaul for the specified time basis is documented in the maintenance record. The current UA inspection status is documented, which includes the make/model manual's directed time of last inspection.

For certain components, the maintenance records are not kept for the specific make/model serialized airframe but rather an

independent maintenance record kept for each component. The purpose of independent maintenance records is due to the interchangeability of these components between airframes.

These components include:

1) Batteries
2) Transmitter
3) Ground station

Aircraft and acceptance forms identify the aircraft make/model, serial number, battery charge, aircraft weight, and a place for the PIC to sign acceptance of the aircraft for operations. The acceptance form is the first document in the UA's maintenance record for each make/model aircraft. Once signed over to the PIC, they accept full responsibility of the safe operation of the aircraft.

NOTE

The PIC signs acceptance forms for each independent component as well.

The maintenance records are retained until the work is repeated or superseded by other work or for 1 year after the work. All maintenance records are available for inspection by the FAA or authorized personnel from the NTSB.

6.4 FUNCTIONAL CHECK FLIGHTS

A Functional Check Flight (FCF) shall be conducted when UA critical components (e.g., motor, receiver, flight computer, servos) are replaced or overhauled. The make/model operating manuals further discuss the requirements for FCF required flights. The FCF shall be annotated in the UA's maintenance record.

FCF Qualification

FCF qualified PIC are held by the most senior PICs. At a minimum, a PIC can be a FCF PIC with 75 or more hours in the make/model platform. Any VO may be utilized during an FCF.

To be fully qualified as a FCF PIC, the PIC conducts one flight with a current FCF PIC as the instructor. The FCF instructor administers an oral exam to the PIC under training. The level of systems knowledge and understanding for the student FCF PIC must be superior to the average PIC.

Upon completion of the oral exam and the instruction flight, the student FCF PIC receives an evaluation FCF check flight. Upon successful completion, the FCF PIC receives a FCF PIC designation letter and is filed in their record.

THIS PAGE INTENTIONALLY LEFT BLANK

APPENDIX

ACRONYMS

Acronym	Definition
AIM	Aeronautical Information Manual
AGL	Above Ground Level
CFR	Code of Federal Regulation
COA	Certificate of Authorization
CRM	Crew Resource Management
EP	Emergency Procedure
ESC	Electronic Speed Controller
FAA	Federal Aviation Administration
FAR	Federal Aviation Regulation
FCC	Federal Communications Commission
FCF	Functional Check Flight
FSDO	Flight Standards District Office
GPS	Global Positioning System
IMSAFE	Illness, Medication, Stress, Alcohol, Fatigue, Emotion
LiPo	Lithium-Polymer
LOA	Letter of Agreement
METAR	Meteorological Aerodrome Report
MEC	Minimum Essential Criteria
MTR	Military Training Route
MM	Marek Management
NAS	National Airspace System
NOAA	National Oceanic Atmospheric Administration
NOTAM	Notice to Airmen
NTSB	National Transportation Safety Board
PAVE	PIC, Aircraft, EnVironment, External pressures

Acronym	Definition
PJA	Parachute Jumping Area
PIC	Pilot in Command
SIGMET	Significant Meteorological Information
sUAS	Small Unmanned Aircraft System
TAF	Terminal Area Forecast
TFR	Temporary Flight Restriction
UA	Unmanned Aircraft
UAS	Unmanned Aircraft System
VFR	Visual Flight Rules
VLOS	Visual Line of Sight
VMC	Visual Meteorological Conditions
VO	Visual Observer

Marek Management General Operations Manual

MAREK MANAGEMENT

SKYWARD 1 OPERATIONS MANUAL

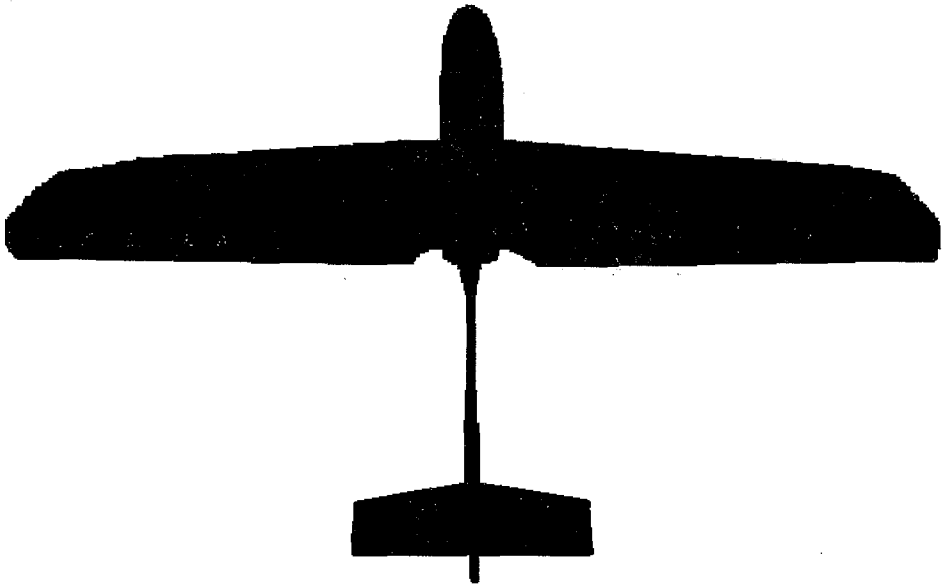

VERSION 0
2014

THIS PAGE INTENTIONALLY LEFT BLANK

RECORD OF CHANGES

Change Number	Date of Entry	Remarks	Verified by Signature

THIS PAGE INTENTIONALLY LEFT BLANK

TABLE OF CONTENTS

RECORD OF CHANGES.....iii
TABLE OF CONTENTS.....v
TABLE OF FIGURES.....vii

PREFACE.....1

CHAPTER ONE - OVERVIEW.....1-1

1.1 AIRCRAFT DESCRIPTION.....1-1
1.2 POWER PLANT.....1-2
1.3 ELECTRICAL SYSTEM.....1-2
1.4 SERVOS/ACTUATORS.....1-3
1.5 RECEIVER.....1-4
1.6 FLIGHT CONTROL SYSTEM.....1-4
1.7 FLIGHT COMPUTER.....1-4
1.8 PITOT-STATIC SYSTEM.....1-6
1.9 TELEMETRY SYSTEM.....1-6
1.10 GROUND STATION.....1-6
1.11 FLIGHT INSTRUMENTS.....1-7
1.12 PAYLOADS.....1-7
1.13 OPERATING LIMITS.....1-8

CHAPTER TWO - NORMAL PROCEDURES.....2-1

2.1 CREW COMPOSITION.....2-1
2.2 ACCIDENT PREVENTION.....2-1
2.3 EVENT PLANNING.....2-2
2.4 EVENT BRIEF.....2-3
2.5 BATTERY OPERATIONS/ENDURANCE.....2-3
2.6 PREFLIGHT PROCEDURES.....2-5
2.7 PRELAUNCH PROCEDURES.....2-6
2.8 LAUNCH PROCEDURES.....2-7
2.9 CLIMB PROCEDURES.....2-9
2.10 OPERATIONS PROCEDURES.....2-9
2.11 RECOVERY PROCEDURES.....2-10
2.12 AFTER RECOVERY PROCEDURES.....2-11
2.13 EVENT DEBRIEF.....2-11

CHAPTER THREE - EMERGENCY PROCEDURES.....3-1

3.1 INTRODUCTION.....3-1
3.2 GROUND EMERGENCIES.....3-1
3.3 IN FLIGHT EMERGENCIES.....3-2

CHAPTER FOUR - SERVICE AND HANDLING.....4-1

4.1 INTRODUCTION.....4-1
4.2 AIRCRAFT HANDLING.....4-1
4.3 MAINTENANCE OF COMPONENTS.....4-1
4.4 SERVOS/ACTUATORS.....4-2
4.5 MOTOR.....4-3
4.6 ELECTRONIC SPEED CONTROLLER.....4-6
4.7 PROPELLER.....4-9
4.8 RECEIVER.....4-10
4.9 FLIGHT COMPUTER.....4-11
4.10 TRANSMITTER.....4-13
4.11 GROUND STATION.....4-15
4.12 BATTERIES.....4-16
4.13 CENTER OF GRAVITY.....4-18
4.14 FUNCTIONAL CHECK FLIGHTS.....4-18

APPENDIX - ACRONYMS.....A-1

TABLE OF FIGURES

FIGURE 1-1 AIRCRAFT DIMENSIONS.....1-1
FIGURE 1-2 FLIGHT MODES.....1-5

FIGURE 4-1 MOTOR DIMENSIONS.....4-4
FIGURE 4-2 MOTOR PERFORMANCE (14.8V/11X7 PROP).....4-4
FIGURE 4-3 TELEMETRY FREQUENCY UTILIZATION.....4-12
FIGURE 4-4 TRANSMITTER FREQUENCY UTILIZATION.....4-14
FIGURE 4-5 CENTER OF GRAVITY.....4-18

THIS PAGE INTENTIONALLY LEFT BLANK

PREFACE

SCOPE

This make/model operations manual provides operation and maintenance instructions for Marek Management (MM) personnel operating the MM Skyward 1 small Unmanned Aircraft System (sUAS). All operators of the MM Skyward 1 must be familiar with the content of this operating manual.

While extremely detailed, this manual cannot capture all possible operational scenarios. In these circumstances, the operator must apply sound judgment.

OTHER PUBLICATIONS

This manual is complemented by the following MM documents:

1) General Operations Manual
2) Skyward 1 Checklist

UPDATES

MM is responsible for its Skyward 1 operators to use the most current operating manual. MM will distribute changes and ensure the appropriate incorporation. Each change modification shall be recorded in the "Record of Changes" at the beginning of this document, and the appropriate changes implemented into this operating manual.

CHANGE REQUESTS

For changes to technical and operating procedures to this manual, any operator or Federal Aviation Administration (FAA) Administrator can make a request. These requests are reviewed by the Lead Pilot in Command (PIC) Instructor-Evaluator who implements the appropriate change via a serialized change notice, which will be distributed to all users of this manual.

WARNINGS, CAUTIONS, AND NOTES

WARNINGS, CUATIONS, and NOTES are used throughout the text in this document to emphasize areas of importance. Throughout this operating manual, the following applies to the terms WARNING, CAUTION, and NOTE:

WARNING

A WARNING pertains to a procedure or condition that could cause severe injury or death, if not carefully followed.

CAUTION

A CAUTION pertains to a procedure or condition that could cause damage to equipment, if not carefully followed.

NOTE

A NOTE pertains to a procedure or condition that is essential for emphasis.

TERMS

Use of the following terms represents specific meanings in context of this operating manual.

1. "Shall" is used when a procedure is mandatory.

2. "Should" is used when a procedure is recommended.

3. "Land Immediately" is used during a condition when a landing must be performed immediately without regards to making it to a designated landing area.

4. "Land as Soon as Possible" is used during a condition when an immediate landing is needed, but can be delayed until reaching a designated landing area.

CHAPTER ONE
OVERVIEW

1.1 AIRCRAFT DESCRIPTION

The Marek Management (MM) Skyward 1 and its ground station is a small Unmanned Aircraft System (sUAS) that conducts nadir imagery for aerial mapping and collects airborne sensor data. The MM Skyward 1 is an Unmanned Aircraft (UA) with a high, fixed-wing and empennage with a vertical and horizontal stabilizer. The MM Skyward 1 does not have a landing gear; therefore, conducts belly landings and hand launched takeoffs.

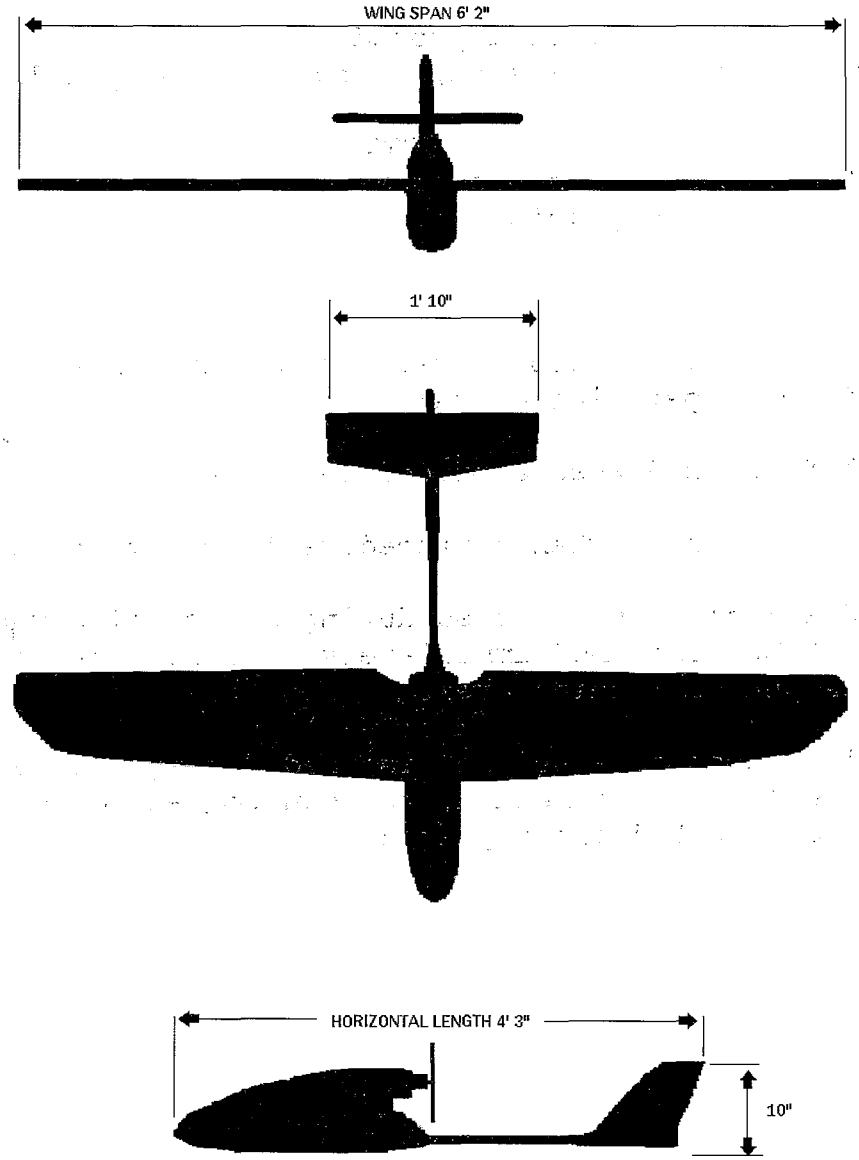

Figure 1-1 Aircraft Dimensions

1.2 POWER PLANT

The power plant system onboard the MM Skyward 1 includes the motor, propeller, and the Electronic Speed Controller (ESC).

Motor

A single, brushless electric Direct-Current (DC) motor engine provides the power propulsion for the MM Skyward 1. The motor is attached to a steel bracket built into the airframe. The motor is positioned behind the wing creating a reverse configuration (or push style motor) applying thrust. This arrangement provides power just aft of the center of gravity.

Propeller

A propeller with the size dimension 11 X 7 is applied to the motor shaft creating the thrust needed to power the aircraft.

Electronic Speed Controller

The motor is controlled by a 60 Ampere (A) ESC. The ESC provides the computing power to control and regulate the motor. The ESC is placed in an area of the aircraft where it receives ample cooling airflow. The ESC is powered directly from the battery source and outputs 3 phase current by pulse power to the motor. The ESC outputs a signal to the receiver through the flight computer.

NOTE

A separate power lead (not associated with the ESC) provides a Battery Eliminator Circuit (BEC), 5 Volt (V)/3A, that connects to the receiver through the flight computer.

1.3 ELECTRICAL SYSTEM

The electrical system onboard the MM Skyward 1 centers upon the Lithium-Polymer (LiPo) battery and the following components: remote voltage alarm, BEC, and electrical safety button

Lithium-Polymer Battery

The LiPo battery is the electrical source and fuel system for the MM Skyward 1. The LiPO battery delivers the electrical fuel for the motor and the electrical requirements for other components. These components include the receiver, servos, and

flight computer. The LiPo battery is a 4 cell (4 cells in series), 14.8V LiPO battery.

NOTE

The normal LiPo battery ranges from 13.3V to 16.8V. The LiPo battery should be limited to voltage drops below 14.7V in order to preserve the life of the battery.

Remote Voltage Alarm

A remote voltage alarm is attached to each battery onboard to alert the operators of a low voltage condition. The alarm alerts the crews when one of the battery cells drops below 3.8V (40% capacity).

Battery Eliminator Circuit

The BEC provides an independent, reduced voltage level of 5V/3A to the electrical equipment not associated with the motor or ESC. These electrical components do not require the higher voltage associated with powering the motor. The BEC powers the receiver, flight computer, and servos.

NOTE

This independent power source allows for flight control commands to be received in the event a motor's ESC experiences a catastrophic failure.

Safety Button

The electrical safety button, a master switch, arms the servos, receiver, and motor. The safety button prevents all UA electrical components from receiving power until the safety switch is pressed and held. The safety switch blinks red when unarmed and indicates solid red when armed.

1.4 SERVOS/ACTUATORS

The MM Skyward 1 contains 4 servos with actuators that power the ailerons (2), elevator (1), and rudder (1). A brushed actuator powers each servo with a working voltage between 4.5V to 6.0V modulated digitally. The bearings are metal with 4 metal gears and 1 nylon gear.

1.5 RECEIVER

The MM Skyward 1 has an eight-channel full range receiver with remote receiver. The main receiver has one antenna, and the remote antenna has two antennas. The receiver accepts signal from a transmitter to command the UA.

The receiver interfaces with the flight computer, servos, and the ESC/motor. Through the flight computer, the receiver is powered by the 5V BEC.

1.6 FLIGHT CONTROL SYSTEM

The primary flight control surfaces (ailerons, elevators, and rudders) and motor (throttle) are operated by the transmitter. The telemetry in conjunction with the ground station is a secondary means of flight control.

NOTE

In the event the ground station is being used for flight control operations, the Pilot in Command (PIC) must be prepared to take control of the aircraft quickly in the event the telemetry control fails.

The transmitter provides the flight control movements and throttle settings necessary for manual and assisted flight mode control of the aircraft. In addition to the transmitter providing aviation control, the transmitter also has four additional channels used for flight mode changes and payload operations. The transmitter has a timer built-in to allow for flight time readouts for the PIC.

1.7 FLIGHT COMPUTER

The MM Skyward 1 utilizes a sophisticated flight computer that integrates processors, accelerometers, gyroscopes, magnetometer, barometer, compass, and Global Positioning System (GPS).

The six primary modes of operation for the flight computer include a manual mode (1), assisted flight modes (2), autonomous mode (1), and commanded modes (2). The transmitter commands these modes.

The following figure shows the six flight modes available to MM fixed-wing aircraft.

Primary Mode	Flight Mode
Manual	Manual
Assisted	Stabilize
Assisted	Fly by Wire
Autonomous	Autonomous
Commanded	Loiter
Commanded	Return to Land

Figure 1-2 Flight Modes

NOTE

The six flight modes are independent of the ground station. All flight modes are commanded from the transmitter.

Manual Mode

The Manual Mode provides the most raw operator inputs to the UA from the transmitter. The operator has no assistance from the flight computer to maintain strait and level flight. This mode allows for the operator to have full control of the UA. No GPS is required to use this mode of operation.

Stabilize Mode

The Stabilize Mode provides an assisted autopilot function for the operator. This mode returns the aircraft to level after the roll and pitch controls are released on the transmitter. This mode provides an added level of stability to keep the aircraft in level flight. No GPS is required to use this mode of operation.

Fly by Wire

The Fly by Wire Mode provides an assisted autopilot function for the operator. If the UA desires to go right, then banking right maintains level while going right. If the UA is pitched down, then the UA pitches down until released. This mode provides an even higher level of stability than the Stabilize Mode. No GPS is required to use this mode of operation.

Autonomous

The Autonomous Mode places the UA into a preplanned route that has been uploaded to the flight computer. This preplanned route

can be independently uploaded or can be uploaded via telemetry. GPS is required to use this mode of operation.

Loiter

The Loiter Mode is a commanded mode to set the aircraft into a circling pattern with a 200 ft radius. The circle pattern can be adjusted by moving the transmitter stick or telemetry. GPS is required to use this mode of operation.

Return to Land

The Return to Land Mode is a commanded mode that returns the UA to its point of departure (first position of GPS lock). This mode returns the aircraft direct to the landing area and places the UA into a circling pattern at an altitude of 330 feet Above Ground Level (AGL). GPS is required to use this mode of operation.

1.8 PITOT-STATIC SYSTEM

A subsystem of the flight computer, the pitot-static system consists of a ram air tub and a static vent perpendicular to the ram air tub. The ram air tub measures the air pressure forced through the front of the tub. The static vent measures ambient air pressure from the surrounding atmosphere. The pitot-static system is connected at the front of the aircraft. The purpose of this system is to achieve an accurate Indicated Airspeed (IAS) for the flight computer.

1.9 TELEMETRY SYSTEM

A subsystem of the flight computer, the telemetry system provides the ability to transfer data from the aircraft to the ground station and the ability to command the aircraft from the ground station. The telemetry system includes a transceiver with antenna connected to the aircraft, and a transceiver with antenna connected to the remote ground station.

1.10 GROUND STATION

A ground station is comprised of one laptop computer with flight event software and a telemetry transceiver with antenna.

The ground station augments the flight control system. The MM Skyward 1 is primarily controlled independently with a transmitter for Visual Line of Sight (VLOS) operations. The

ground station is utilized to verify instrument readouts, and the progression and accuracy of GPS guided positioning.

1.11 FLIGHT INSTRUMENTS

The ground station software has several flight instruments that provide readouts when telemetry is connected. These flight instruments include an airspeed indicator, GPS altimeter, Horizontal Situation Indicator (HSI), Vertical Speed Indicator (VSI), attitude indicator with additional data readouts repeated on the attitude indicator.

The additional data readouts on the attitude indicator include: IAS, Ground Speed (GS), heading, GPS altitude, battery status, GPS status, telemetry status, current flight mode, and various navigational data for a flight plan.

1.12 PAYLOADS

Payloads encompass various consumer-produced sensors that capture still imagery and atmospheric data. The still imagery sensors include red-green-blue imagery and visible near infrared imagery.

Below are various cameras capable of being carried onboard:

Canon SD1400
Canon G15
Canon SX260
Canon SX230
Canon S100

1.13 OPERATING LIMITS

Maximum Airspeed: 48 kts IAS
Minimum Airspeed: 19 kts IAS
Cruising Airspeed: 25 kts IAS

Average Endurance: 40 minutes
Maximum Endurance: 50 minutes

Operating Temperature: 15°F to 110°F
Maximum Battery Temperature: 130°F
Maximum ESC Temperature: 110°C

Maximum Battery Voltage: 4.2V per cell
Battery Voltage Alarm: 40% Capacity (3.8V per cell)
Return to Land Mode Triggered: 33% Capacity (3.76V per cell)
Battery Minimum Operating Voltage: 25% Capacity (3.72V per cell)
ESC Low Voltage Protection Cutoff Threshold: 3.1V per cell
Permanent Battery Damage: 3.0V per cell

Basic Operating Weight with No Payload: 5 lbs
Maximum Payload Weight: 4 lbs
Maximum Total Takeoff Weight: 10 lbs

Prohibited Maneuvers:

1) Over flight of people, vehicles, vessels, and structures
2) Operating in other than Class G airspace
3) Operating above 400 feet AGL
4) Airspeed above 50 kts
5) Aerobatics
6) Bank Angles in excess of 90 degrees
7) Intentional stalls (unless for training purposes)

CHAPTER TWO
NORMAL PROCEDURES

2.1 CREW COMPOSITION

The MM Skyward 1 utilizes a PIC and Visual Observer (VO) for all operations. These two positions are the crew needed to successfully operate the MM Skyward 1 safely and effectively in the U.S. National Airspace System (NAS).

Pilot in Command

The PIC is defined as the pilot in control of the MM Skyward 1 by means of direct radio link to the UA. The PIC directly controls the UA with a radio transmitter by VLOS.

In addition to the general qualification requirements set forth in the General Operations Manual, the PIC shall log at a minimum 5 flight hours controlling the MM Skyward 1.

Visual Observer

The VO is a critical component to the success of each flight event. The VO's primary duty is to scan the airspace for airborne threats. The VO will immediately notify the PIC of any airborne threat.

2.2 ACCIDENT PREVENTION

The MM Skyward 1 crews ensure ground and air operations are conducted within the safest parameters. Each sUAS crew must minimize human error. Below are common practices required for all crewmembers:

1) A thorough knowledge and understanding of aircraft systems and procedures
2) Utilization of Crew Resource Management (CRM) and risk management
3) Checklist usage
4) Emergency Procedures (EP) familiarity and continual review
5) Bold face EP procedures recalled immediately from memory

2.3 EVENT PLANNING

Prior to each flight event, the PIC conducts proper event planning to ensure the operation is conducted safely. Event planning begins by ensuring all proper prerequisites are fulfilled before operating the MM Skyward 1 in a commercial environment. Below is the event planning checklist.

EVENT PLANNING CHECKLIST

1. NOTAM of flight event---------- POSTED AND ACCURATE

2. Local FSDO Documents---------- FILED/COPY (if applicable)

3. Required PIC and MM documents---------- COPIES

NOTE

The PIC and MM documents include: private pilot certificate, aircraft registration certificate, MM General Operations Manual, MM Skyward 1 Operations Manual, Certificate of Authorization (COA), and exemption letter.

4. Weather---------- CHECKED

NOTE

All flight operations commence 30 minutes after sunrise and complete 30 minutes before sunset.

NOTE

Ensure weather requirements are in compliance with Section 3.3 of the MM General Operations Manual.

5. NOTAMs and TFRs---------- CHECKED

6. Airspace---------- IN COMPLIANCE

NOTE

Ensure airspace is in compliance with Section 3.6 of the MM General Operations Manual.

7. Property Owners---------- LETTER OF AUTHORIZATION

8. Flight planning for operation---------- COMPLETED

2.4 EVENT BRIEF

The brief shall be conducted at the site before operations begin. Before the event brief, the PIC and VO shall survey the area of operation to note obstacles, terrain, structures, and any other hazards that may cause an issue with operations. In addition to surveying the property, winds are checked at the site, and a designated launch and recovery is designated with bright orange markings.

EVENT BRIEF

1. General
    a. Crew assignment/responsibilities
    b. Documentation
    c. Takeoff and land times/in compliance with NOTAM
    d. Time hack
2. Event Overview
    a. Weather/NOTAMS
    b. Go/no-go criteria
    c. Airspace/operating area
    d. Launch procedures
    e. Event flight profile
    f. Recovery procedures
    g. Planned endurance
    h. Contingency plan
3. Crew Resource Management
    a. Ground/in-flight checks
    b. Communications discipline
    c. Sterile flight deck
4. Emergency Procedures
    a. Crew responsibilities
    b. Battery operations
    c. See and avoid
    d. Loss of link procedures
    e. Loss of GPS procedures
5. Miscellaneous
    a. Risk management
    b. Others

2.5 BATTERY OPERATIONS/ENDURANCE

The PIC shall ensure adequate battery power exists onboard the UA to successfully perform the flight event.

The battery is monitored by a primary telemetry link and a secondary voltage alarm attached directly to the operating

battery. The primary link indicates low voltage via audible warning on the ground station or transmitter. The secondary voltage alarm emits a loud alarm from the MM Skyward 1 to indicate the battery is low, and the aircraft shall land as soon as possible.

Both primary and secondary alarms will sound at 3.8V (40% capacity), and the aircraft will land as soon as possible. The LiPo battery should never drop below 3.72V per cell due to its capacity reaching 25%.

At 33% capacity, the MM Skyward 1 will automatically switch to the RETURN TO LAND MODE and proceed direct the landing area at an obstacle clearance altitude of 330 feet AGL.

CAUTION

Improper flight planning may cause the MM Skyward 1 to fail reaching the designated landing area; therefore, proper event planning requires the PIC to plan the event with enough reserve battery power to achieve a safe recovery.

Battery health is vital to the safety and success of each flight event. Each battery cell must be checked for its health before the launch of the MM Skyward 1 and monitored via telemetry during the flight event.

2.6 PREFLIGHT PROCEDURES

After the Event Brief, the PIC shall conduct a preflight inspection of the MM Skyward 1 and its ground control system (if applicable).

PREFLIGHT CHECKLIST

1. Operating Area---------- SURVEYED
2. Launch/Landing Area---------- DESIGNATED
3. Required Documents---------- PRESENT
4. Aircraft Wing---------- ATTACHED
5. General Aircraft Condition---------- INSPECT
6. Wing---------- SECURE/INSPECT
7. Tail---------- SECURE/INSPECT
8. Fuselage---------- SECURE/INSPECT
9. Motor---------- SECURE/INSPECT
10. Propeller---------- SECURE/INSPECT
11. Servos/Actuators (4)---------- SECURE/INSPECT
12. Servo Rods (4)---------- SECURE/INSPECT
13. Electronic Bay---------- INSPECT
14. Batteries---------- CHECK VOLTS
15. Battery Compartment---------- INSPECT
16. Transmitter---------- CHECK SWITCHES
17. Transmitter---------- CHECK VOLTS
18. Ground Station---------- CHECK (if applicable)

2.7 PRELAUNCH PROCEDURES

After the Preflight Checklist, the PIC shall conduct a Prelaunch Checklist.

PRELAUNCH CHECKLIST

1. Position Aircraft---------- LAUNCH AREA

2. Transmitter---------- ON

3. Flight Mode---------- MANUAL

WARNING

Failure to be in the MANUAL MODE may cause an inadvertent engagement of the motor causing a possible propeller impact with human flesh.

4. Batteries---------- CONNECT AND SECURE

NOTE

Ensure the MM Skyward 1 is straight and level when powered.

WARNING

Ensure any battery that is damaged is appropriately discarded. Damaged cells can create a condition where batteries can ignite and cause a possible fire causing a potentially hazardous situation.

5. Electronic Speed Controller---------- PROPER TONE

6. Battery Compartment---------- SECURE

7. Center of Gravity---------- CHECK

8. Pitot-Static System Cover---------- REMOVED

9. Pitot-Static System---------- SECURE AND CLEAR

10. Flight Computer---------- GPS ACQUIRED INDICATED

11. Safety Button---------- PRESS AND HOLD

WARNING

While handling the MM Skyward 1 near a propeller with a battery connected, an inadvertent throttle control switch movement, mode of operation switch, or electrical malfunction could cause an inadvertent rotation of the motor causing a propeller strike with human flesh.

12. Safety Button---------- SOLID RED INDICATION

13. Flight Controls and Motor---------- PROPER MOVEMENT

WARNING

When testing the motor, keep clear of the propeller area.

14. Transmitter---------- RANGE CHECK

15. Transmitter---------- NORMAL

16. Flight Mode---------- STABILIZE

17. Flight Controls---------- PROPER MOVEMENT

18. Flight Mode---------- FLY BY WIRE

19. Flight Controls---------- PROPER MOVEMENT

20. Ground Station---------- LINKED (If Applicable)

21. Ground Station---------- PROPER AIRSPEED (If Applicable)

22. Ground Station----- VERIFY GPS ALTITUDE ZERO (If Applicable)

NOTE

During flight events above 330 feet AGL, the ground station shall be utilized in order to verify the GPS triangulated altitude of 400 feet AGL is never violated.

2.8 LAUNCH PROCEDURES

After the Prelaunch Checklist, the PIC launches the MM Skyward 1. The PIC ensures at least 300 feet in the direction of the launch area is clear of obstructions and terrain. No people, vehicles, or structures shall be in the direction of the launch.

The PIC verifies the airspace is free of manned aircraft, and an "ALL CLEAR" from the VO is received. Upon airspace being cleared, the PIC announces "TAKEOFF" (sets takeoff thrust) and throws the aircraft in a fluid, forceful motion (not extremely hard) into the wind.

LAUNCH CHECKLIST

1. Operating Area---------- CLEAR

2. Launch Path---------- CLEAR

WARNING

Failure to ensure the launch path is clear could result in a hazardous situation with the MM Skyward 1 impacting the ground, objects, or people.

3. Flight Mode---------- MANUAL OR FLY BY WIRE

4. Timer Button---------- PRESS

5. Throttle---------- TAKEOFF THRUST

6. Launch---------- THROW INTO WIND

WARNING

Do not allow the launching hand to come into contact with the propeller. Be aware of the propeller location during the launch.

7. Flight Controls-------- MAINTAIN STRAIGHT/LEVEL FIRST 25 FEET

8. Flight Controls---------- PITCH UP 15-20 DEGREES

NOTE

The operation of the MM Skyward 1 shall never be conducted from a moving device or vehicle.

NOTE

At all times during the flight event, the PIC and VO shall be in verbal contact with each other.

2.9 CLIMB PROCEDURES

After the launch, the PIC climbs the aircraft to a safe altitude and switches the flight mode to the appropriate mode to accomplish the flight event.

CLIMB/EVENT CHECKLIST

1. Altitude---------- CLIMB TO OPERATING ALTITUDE

2. Flight Mode---------- As Required

3. Ground Station---------- As Required

NOTE

The MM Skyward 1 shall not be operated at an altitude that is hazardous to people or animals. The intentional over flight of people is strictly prohibited.

2.10 OPERATIONS PROCEDURES

Once the MM Skyward 1 has reached its operating altitude and begins its event profile and periodically throughout the event, the PIC shall conduct an Operations Checklist. The Operations Checklist is to ensure all systems are operating normally, and that no degraded systems are indicated.

OPERATIONS CHECKLIST

1. Batteries---------- VOLTAGE CHECKED

CAUTION

Improper flight planning may cause the MM Skyward 1 to fail reaching the designated landing area; therefore, proper event planning requires the PIC to plan the event with enough reserve battery power to achieve a safe recovery.

2. Altitude---------- BELOW 400 FEET AGL

3. GPS Link---------- CHECKED (if applicable)

NOTE

The sUAS shall avoid all manned aircraft by 1,000 feet vertically and 1 sm laterally within 1,000 feet vertically.

2.11 RECOVERY PROCEDURES

Once the MM Skyward 1 has completed the flight event, the aircraft returns to the recovery area. The PIC guides the aircraft to the designated recovery area and lands into the wind.

The PIC ensures at least 300 feet of the landing approach area is clear of obstructions and terrain. No people, vehicles, or structures shall be in the approach corridor. The PIC announces "LANDING," and the VO announces "ALL CLEAR" for the designated approach corridor and recovery area.

RECOVERY CHECKLIST

1. Flight Mode---------- MANUAL

2. Approach Corridor---------- CLEAR

WARNING

Failure to ensure the approach corridor and recovery area are clear could result in a hazardous situation with the MM Skyward 1 impacting the ground, objects, or people.

3. Landing Pattern---------- EXECUTE

2.12 AFTER RECOVERY PROCEDURES

Once the MM Skyward 1 has landed, the PIC shall secure the aircraft.

AFTER RECOVERY CHECKLIST

1. Safety Button---------- PRESS AND HOLD

WARNING

While handling the MM Skyward 1 near a propeller with a battery connected, an inadvertent throttle control switch movement, mode of operation switch, or electrical malfunction could cause an inadvertent rotation of the motor causing a propeller strike with human flesh.

2. Safety Button---------- BLINKING RED INDICATION
3. Battery Compartment---------- OPEN
4. Batteries---------- DISCONNECT
5. Transmitter---------- OFF
6. Pitot-Static System Cover---------- ON

2.13 EVENT DEBRIEF

The debriefing shall be conducted after each flight event to discuss the previous operation. The debrief allows the PIC and VO to discuss any safety issues or abnormal situations that may have occurred.

EVENT DEBRIEF

1. Safety of flight issues
2. Abnormal situations
3. CRM issues
4. Miscellaneous

THIS PAGE INTENTIONALLY LEFT BLANK

CHAPTER THREE
EMERGENCY PROCEDURES

3.1 INTRODUCTION

This chapter outlines the proper guidelines for managing emergencies that may arise during flight. To execute proper EPs, the PIC must have a thorough knowledge of this chapter and execute simulated EPs on a routine basis. It is not possible to forecast every EP that can occur and in these situations the PIC must use sound judgment. Systems knowledge aids the PIC in making the proper decisions needed in an EP situation.

All **BOLD FACE** procedures are time critical steps and must be committed to memory by the PIC.

3.2 GROUND EMERGENCIES

SMOKE ON THE GROUND

1. Batteries---------- DISCONNECT

WARNING

Exposure to smoke must be limited in order to avoid toxic fume inhalation.

FIRE ON THE GROUND

1. Fire Extinguishing Agent---------- DISCHARGE

WARNING

Discharge fire extinguishing agent from a safe distance as to not become consumed in flames.

WARNING

Exposure to smoke must be limited in order to avoid toxic fume inhalation.

3.3 IN FLIGHT EMERGENCIES

ABORTED LAUNCH

1. Altitude---------- CLIMB TO A SAFE ALTITUDE

NOTE

If an aborted launch is due to a catastrophic failure, then the PIC should control crash into an open field away from people, vehicles, and structures.

2. Flight Mode---------- MANUAL

3. Perform Recovery Checklist

ABNORMAL MOTOR IN FLIGHT

1. Flight Mode---------- RETURN TO LAND

NOTE

An abnormal motor may lead to a motor failure; therefore, altitude may need to be conserved. Consideration should be made for the PIC to switch out of the RETURN TO LAND Mode in order to maintain a higher altitude that does not breach the 400 feet AGL ceiling.

2. Flight Path---------- LAND AS SOON AS POSSIBLE

MOTOR FAILURE

1. Flight Mode---------- MANUAL

2. Flight Path---------- LAND IMMEDIATELY

NOTE

If distance and altitude permit, the landing should be made at the designated recovery area (LAND AS SOON AS POSSIBLE); however, if the landing cannot be made, then the PIC shall steer into an open field away from people, vehicles, and structures.

SMOKE OR FIRE IN FLIGHT

1. **Flight Mode---------- RETURN TO LAND**

2. Flight Path---------- LAND IMMEDIATELY

NOTE

Upon landing, this emergency becomes a SMOKE or FIRE ON THE GROUND EP.

NOTE

If distance and altitude permit, the landing should be made at the designated recovery area (LAND AS SOON AS POSSIBLE); however, if the landing cannot be made, then the PIC shall steer into an open field away from people, vehicles, and structures.

ABNORMAL FLIGHT CHARACTERISTICS

1. **Flight Mode---------- MANUAL**

2. Flight Path---------- LAND AS SOON AS POSSIBLE

BATTERY PERCENTAGE BELOW 33%

1. **Flight Mode---------- RETURN TO LAND**

NOTE

The MM Skyward 1 should automatically cycle into the RETURN TO LAND Mode; however, manually shifting to RETURN TO LAND ensures the aircraft returns expeditiously.

2. Flight Path---------- LAND AS SOON AS POSSIBLE

ABNORMAL VOLTAGE

1. **Flight Mode---------- RETURN TO LAND**

2. Flight Path---------- LAND AS SOON AS POSSIBLE

LOSS OF LINK

1. Antennas---------- UNBLOCK

NOTE

An obstacle may be blocking the antenna transmission and/or reception.

If link is regained:

2. Flight Mode---------- RETURN TO LAND

3. Flight Path---------- LAND AS SOON AS POSSIBLE

If link is never reestablished, the MM Skyward 1 returns to land, and the aircraft cuts the throttle and lands immediately.

NOTE

The PIC or VO continually call out verbal position reports of the MM Skyward 1 as it attempts to return to land.

WARNING

Failure to ensure the approach corridor and recovery area are clear could result in a hazardous situation with the MM Skyward 1 impacting the ground, objects, or people.

LOSS OF GPS

1. Flight Mode---------- MANUAL OR ASSISTED

CAUTION

Failure to shift the Flight Mode into MANUAL or ASSISTED may result in the aircraft flying to an erroneous GPS position.

2. Flight Path---------- LAND AS SOON AS POSSIBLE

MANNED AIRCRAFT AVOIDANCE

1. Flight Mode---------- RETURN TO LAND

NOTE

Depending on the closure rate of the manned aircraft, the Flight Mode may need to be shifted to MANUAL or an ASSISTED Mode in order for the aircraft to descend and/or flight path altered.

WARNING

Manned aircraft operating closely to the MM Skyward 1 could lead to a possible mid-air collision. The PIC must return the MM Skyward 1 to the landing site and recover.

2. Altitude---------- As Required

3. Flight Path---------- LAND AS SOON AS POSSIBLE

NOTE

If the manned aircraft has penetrated quickly and deep into the MM Skyward 1 operating area, then the PIC shall LAND IMMEDIATELY.

GROUND STATION FAILURE

If the aircraft is above 330 feet AGL:

1. Flight Mode---------- RETURN TO LAND

2. Flight Path---------- LAND AS SOON AS PRACTICABLE

NOTE

During flight events above 330 feet AGL, the ground station shall be utilized in order to verify the GPS triangulated altitude of 400 feet AGL is not violated. The PIC ensures the GPS altitude is initiated at a zero altitude point as part of the Prelaunch Checklist.

If the aircraft is at or below 330 feet AGL, then the flight event can proceed as normal.

THIS PAGE INTENTIONALLY LEFT BLANK

CHAPTER FOUR
SERVICE AND HANDLING

4.1 INTRODUCTION

This section addresses specific service and handling requirements for the MM Skyward 1, and the Functional Check Flight (FCF) requirements and procedures.

4.2 AIRCRAFT HANDLING

Before performing any service and handling procedures, the following checks must be accomplished to prevent technician injury and/or damage to the aircraft.

1. Batteries removed
2. Pitot-static system covered
3. Do not push movable surfaces

4.3 MAINTENANCE OF COMPONENTS

The MM Skyward 1 maintenance requirements for aircraft components include: preventative maintenance, overhaul of components, replacement parts, other alterations, and the total time in service. The maintenance records contain the history and scheduled maintenance requirements for each MM Skyward 1 aircraft by serial number.

NOTE

MM must operate at the level of the manufacturer requirement or more conservatively. MM shall adhere to any manufacturer safety bulletin.

Maintenance requirements performed by the technician are outlined for the following components:

1. Servos/actuators
2. Motor
3. ESC
4. Propeller
5. Receiver
6. Flight computer
7. Batteries
8. Transmitter
9. Ground station

Specific aircraft components are mentioned in each section; however, due to supply issues substituted products of equal or superior performance may be used.

4.4 SERVOS/ACTUATORS

The MM Skyward 1 utilizes 4 servos with actuators that power the ailerons (2), elevator (1), and rudder (1). A brushed actuator powers each servo with a working voltage between 4.5V to 6.0V modulated digitally. The bearings are metal with 4 metal gears and 1 nylon gear.

Servo Specifications

All servo data referenced in this manual is derived from the Henge MD933 performance manual. The weight of each servo is 0.42 oz (12g). Its dimensions are 0.89 in (length) by 0.45 in (width) by 0.97 in (height). Operating temperatures range from -20°C to 60°C. Speed ranges from 0.10 sec/60° (6.0V) to 0.12 sec/60° (4.8V). The working current is 50 to 150 milliamp (mA). Torque ranges from 25.0 oz/in (4.8V) to 27.8 oz/in (6.0V)

Servo Linkages

Servo linkages are rigid in metal and do not stretch or shrink. These linkages are secured to the servo horn and clasp closed with an additional rubber ring to secure in place.

Servo Daily Inspection

The servos and linkages are inspected before all flights as part of the Preflight Checklist and flight event day inspections to ensure it is properly attached and connections integrity is maintained. In addition to checking the servo, the servo horn must be inspected to ensure it has not separated from the airframe. Also, the rubber ring is inspected to ensure it is clamping the connection to the servo horn, and it has not decayed.

Servo Routine Inspection

At the 25 flight hour interval, the servos are inspected for binding by listening for abnormalities in the servo. The servo is further tested for smooth control throw. In addition, the technician ensures the servo horn and arm are secure. If the servo horn or arm is discolored, then the servo horn or arm is replaced.

NOTE

The latest manufacturer safety bulletin shall be followed.

Servo Overhaul/Time in Service

100 hours of flight time is used as the service life benchmark for each servo/actuator. After 100 hours of flight time, the servo/actuator and the rubber ring on the linkage clasp are replaced regardless of condition.

After each overhaul process or anytime a servo is removed and reattached, the MM Skyward 1 receives an FCF with a record entry made in the maintenance log for the respective aircraft.

4.5 MOTOR

A single, brushless electric DC motor engine provides the power propulsion for the MM Skyward 1. The brushless motor provides superior efficiency and constant power with fewer mechanical parts compared to brushed electric motors or gas powered motors. With its fewer moving parts, the brushless motor is easily maintained.

The motor is attached to a steel bracket built into the airframe. The motor is positioned behind the wing creating reverse configuration (or push style motor) applying thrust. This arrangement provides power just aft of the center of gravity. The motor is controlled by the ESC, and a propeller with the size dimension 11 X 7 is applied to the motor shaft.

Motor Specifications

All motor data referenced and figures 4-1 & 4-2 are derived from the Tiger MT2820-7 performance manual. The motor diameter is 1.38 in with a length of 1.65 in. The stator diameter is 1.10 in with a length of 0.79 in and a shaft diameter of 0.20 in. The total weight of the motor is 4.66 oz (132g).

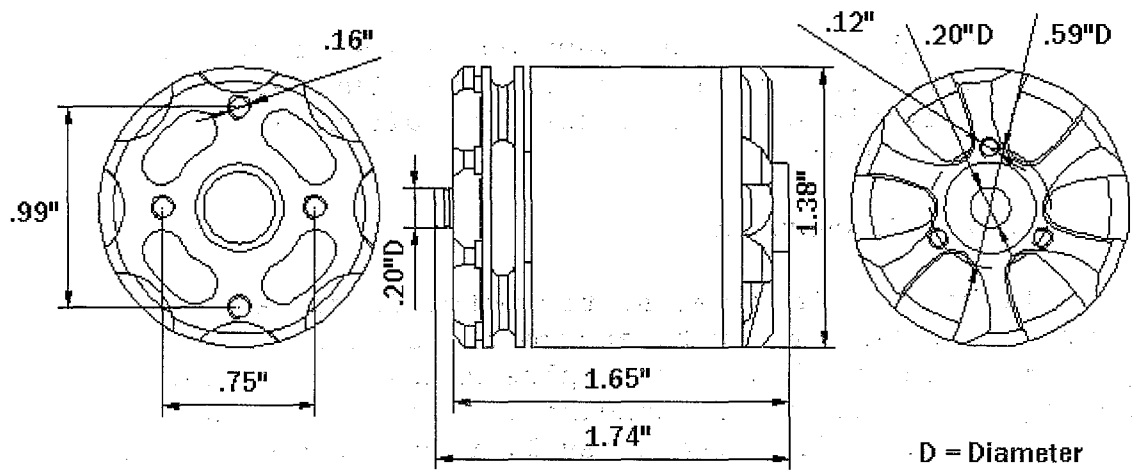

Figure 4-1 Motor Dimensions

The motor's Revolutions per Minute (RPM) is rated at 830 KV (RPM per volt with no load). The MM Skyward 1 utilizes 4 cell LiPo batteries that average 14.8V (3.7V per cell); therefore the RPM with no load is rated at 12,284 RPM (830 KV * 14.8V). The maximum continuous current is 42A, and the maximum efficiency current ranges between 10A to 32A. The maximum continuous power of the motor is 668 Watts (W).

Throttle	Ampere (A)	Watts (W)	Thrust (oz)	RPM	Efficiency (oz/W)
50%	6.5	96.2	27.2	5375	0.28
65%	10.6	156.9	38.1	6300	0.24
75%	15.6	230.9	48.3	7130	0.21
85%	21.4	316.7	57.1	7800	0.18
100%	28.3	418.8	69.8	8520	0.17

Figure 4-2 Motor Performance (14.8V/11X7 prop)

Motor Balancing

Motor balancing is conducted before the maiden flight and requires rebalancing at 50 hours of flight time. Motor balancing reduces vibrations on the airframe and reduces fatigue time on other components being exposed to vibrations. The motor balancing is accomplished through laser oscillation test and/or the flight computer readout for oscillation data. The oscillation data smoothes as the motor is properly balanced. Maintenance to balance the engine does not require an FCF.

Motor Daily Inspection

During preflight and flight event day inspections, the motor is inspected for vibration in the airframe. Unusual sounds or excessive vibrations prohibit the aircraft from flying until the motor is overhauled.

Motor Routine Inspection

At 50 flight hour increments, the motor is tested with a wattmeter and tachometer to ensure the performance levels in Figure 4-2 are obtained within plus/minus 10% of the manufacturer performance standards. If the motor does not meet the manufacturer performance level, then the motor is overhauled and investigated for the performance abnormality. If the motor cannot be rectified, then the motor is fully replaced with a new motor.

NOTE

The latest manufacturer safety bulletin shall be followed.

Motor Overhaul

The motor is overhauled at 100 hour intervals of flight time unless a 50 hour performance test fails. In this case, the motor is overhauled upon an inspection failure.

The motor overhaul process begins by removing the motor from the MM Skyward 1 airframe. Next, an inspection of the electrical wires is conducted. If any wires are frayed or exposed, then the wires are repaired with heat shrink wrap unless the wire is destroyed. In this case, the wires are replaced.

Next, the motor is taken apart and cleaned by using light air pressure or a brush to clean inside the motor compartment. After cleaning inside, the windings are to be inspected for loose parts, scratched, and shiny areas. If the windings are damaged, then the motor is replaced. As part of the overhaul maintenance, the windings and magnets are cleaned with a brush and light air pressure. The magnets are inspected for looseness and any damage such as chips or rub marks. If any of these conditions are observed, the motor is replaced. Lastly, the bearings are tested with a rod to unsure proper functionality. If a bearing does not turn smoothly, then the bearing is replaced. Lubrication is applied to the bearings as part of the overhaul process. The bearings should be replaced after 250 hours of flight time.

After each overhaul process or anytime the motor is removed and reattached, the MM Skyward 1 receives a FCF with a record entry made in the maintenance log for the respective aircraft.

Motor Time in Service

Theoretically, a brushless motor should last indefinitely with bearing replacements; however, overall metal fatigue and coiled wire degradation deems it prudent to replace the entire engine. The complete life cycle of an engine is set at 500 flight hours. At this milestone, the engine is replaced with a new engine regardless of its condition.

4.6 ELECTRONIC SPEED CONTROLLER

The 60A ESC provides the computer processing to regulate the electric motor. The ESC is powered directly from the battery source and outputs 3 phase current by pulse power to the motor. In addition, the ESC circuit board outputs a signal to the receiver through the flight computer.

NOTE

A separate power lead (not associated with the ESC) provides a BEC (5V/3A) that connects to the receiver through the flight computer. This separate power lead ensures the flight computer and receiver have power if the ESC sustains a catastrophic failure.

ESC Specifications

The specifications for the ESC are derived from the Turnigy Plush 60A ESC manual. The continuous current is rated at 60A, and the burst current is rated at 80A. The ESC weighs 2.12 oz (60g), and its dimensions are 3.15 in (length) X 1.22 in (width) X 0.55 in (height).

Due to its electromagnetic properties, the ESC should be placed as far from the receiver as possible as to avoid electromagnetic interference with the radio receiver.

Programmable Functions

The ESC is programmable by an electronics card that can set the following:

1) Brake Setting
2) Battery Type
3) Low Voltage Cutoff Mode
4) Low Voltage Protection Cutoff Threshold
5) Startup Mode
6) Timing Mode

The Brake Setting is set to DISABLED; therefore, throttle cutoff allows the engine to freely spin causing drag during approach phases. The Battery Type is set to the LiPo option. The Low Voltage Cutoff Mode is set to SOFT CUTOFF allowing for a gradual reduction in motor output power when the battery reaches the Low Voltage Protection Cutoff Threshold of HIGH (3.1V per cell).

CAUTION

To allow the battery to discharge below 3.0V per cell, causes the battery irreversible damage.

NOTE

The low voltage cutoff is a tertiary ability to protect the battery from over discharging. The MM Skyward 1 utilizes a primary and secondary warning when voltage settings drop below 3.8V; therefore, the low voltage cut-off should never occur but in the most extreme cases of battery failure.

The Startup Mode is set to NORMAL at 300 milliseconds. With initial acceleration, this mode allows the throttle input immediate response. The Timing Mode is set to LOW at 3.75° allowing a balance of power and efficiency for lower power settings.

ESC Protection Functions

The ESC provides three protection functions. The first protection is a startup failure. If the throttle is applied for two seconds and the motor fails to start, then the throttle is cutoff permanently until the throttle is reset to zero. The second protection function is an overheat protection of 110°C. In this case, the motor automatically reduces power to maintain the ESC temperature below 110°C. The last protection function is fly away protection. If the throttle signal is not detected for

one second, then the motor power is reduced. If the throttle signal is lost for two seconds, then the motor power is shutoff.

ESC Daily Inspection

During preflight and flight event day inspections, the ESC is visually inspected for its general condition in regards to wires and circuit board. At power up, proper tones are emitted to indicate the ESC is functioning properly. With the throttle stick at zero and power applied to the transmitter, power is applied to the ESC. After this power up, a distinctive tone is emitted, followed by four tones (indicating a 4 cell battery applied), and lastly a long tone for the self-test completion. With these indications, the ESC is working properly and is ready for flight.

ESC Routine Inspection

At 25 flight hour increments, the ESC is inspected for frayed wires and damaged insulation. If these deficiencies are discovered, then the degraded areas are shrink wrapped. If the deficient area is not repairable, then the ESC shall be replaced. The programmable functions discussed earlier are reset via the electronics card.

NOTE

The latest manufacturer safety bulletin shall be followed.

ESC Overhaul/Time in Service

At any time the ESC displays any abnormalities, such as visual abnormalities to the circuit board or smoke emitting from the circuit board, the ESC shall be replaced with a new system. If the motor displays abnormalities in pitch or tone, then the ESC should be investigated for the possible cause of the motor abnormality. Adjusting the ESC Timing Mode may solve the issue; however, the ESC may be damaged and may need replacement.

After each overhaul process or anytime the ESC is removed and reattached, the MM Skyward 1 receives an FCF with a record entry made in the maintenance log for the associated aircraft.

The ESC is replaced after 250 hours of flight time regardless of its condition.

4.7 PROPELLER

A reversed pitch (pusher) 11 X 7 propeller is attached to the electric motor. The propeller is secured to the motor shaft with a collet style propeller adapter with a cone shaped prop spinner nut with washer, and spacer inserted inside the propeller to hold it in place.

Before attachment to the MM Skyward 1, the propeller receives a propeller balancing. Balancing the propeller substantially reduces vibrations that otherwise would increase the fatigue life on other MM Skyward 1 components.

Propeller Daily Inspection

The propeller is inspected during the preflight and the daily inspection. Special attention is given to the leading edges of the propeller to ensure no damage has occurred such as chips or dents. In addition, the propeller is ensured that it is tightened appropriately to the motor.

NOTE

The likelihood of a pusher propeller receiving damage is remote due to its position aft of the wing; however, operating in areas with gravel or other small rocks may cause damage to the propeller. The inspection of the propeller shall not be overlooked.

Propeller Routine Inspection

After 25 hours of flight time on a propeller, the propeller is removed from its motor and rebalanced. If the propeller shows any signs of fatigue or damage, then it shall be replaced.

NOTE

The latest manufacturer safety bulletin shall be followed.

Propeller Overhaul/Time in Service

With an overhaul or replacement of a motor, a new propeller should be balanced and installed. A propeller shall not serve longer than 100 hours of service time regardless of condition.

4.8 RECEIVER

An eight channel Digital Spectrum Modulation (DSM)X (wideband agile) full range receiver with remote receiver is utilized with the MM Skyward 1. The main receiver has one antenna, while the remote antenna has two antennas.

The main receiver and remote receiver are placed away from carbon fiber components and the telemetry transceiver to ensure no electromagnetic interference occurs. The path diversity of the transmitter's signal is improved by placing the main and remote receivers as far apart as possible. In addition to placing these receivers apart, the receivers are placed perpendicular to each other. The main receiver is placed on the floor of the electronic bay, while the remote receiver is placed on the wall. This positioning optimizes the RF environment and provides a strong signal link.

The receiver interfaces with the flight computer, servos, and motor. Through the flight computer, the receiver has a separate power source from the main battery to reduce voltage to 5V in order for flight control commands to be received in the event a motor's ESC encounters a catastrophic failure.

The specifications for the receiver are from the Spektrum AR8000 manual. The main receiver is 1.27 in (length) X 1.35 in (width) X 0.45 in (height). The remote receiver is 0.80 in (length) X 1.10 in (width) X 0.27 in (height). The main receiver weight is 0.33 oz (9g), and the remote receiver is 0.20 oz (6g). For operating the receiver, the voltage range is 3.5V to 9.6V.

The receiver's eight channels include:

1) Throttle
2) Aileron
3) Elevator
4) Rudder
5) Gear
6) Auxiliary 1
7) Auxiliary 2
8) Auxiliary 3

Receiver Daily Inspection

The preflight electronic bay inspection and daily inspection involve ensuring the wires and the servo leads are connected tightly from the flight computer. If the servo wire lead wires

are damaged, then the aircraft does not fly until the wires are replaced or fixed with shrink wrap. If servo leads do not stay connected to the receiver, then the receiver needs to be replaced.

In addition to visually inspecting the receiver before each flight, the receiver is tested with a range check during the Prelaunch Checklist. During the range check, servos and the motor are tested to ensure all components are operating correctly with a reduced transmitted wattage at 90 feet away from the MM Skyward 1.

Receiver Routine Inspection

At each 50 flight hour interval, the receiver is inspected by disconnecting all wires, and the receiver cleaned with a brush and light air pressure. All connections in the electronic bay are inspected for integrity and debris. If the receiver shows any damage with the lead plugs, then the receiver is replaced. At each 100 flight hour interval, the receiver has an advanced range test conducted. Any time the receiver is replaced, a FCF is conducted with a record made in the appropriate maintenance log.

NOTE

The latest manufacturer safety bulletin shall be followed.

Receiver Overhaul/Time in Service

The receiver is replaced during any condition that reveals a breach of the receiver's structural integrity. This may be revealed by a missing or loose lead plug pin, case crack revealing the circuit board, or any other indication that calls into question its condition. In the event the receiver conducts 750 flight hours, the receiver is replaced regardless of its condition.

4.9 FLIGHT COMPUTER

The MM Skyward 1 utilizes a sophisticated flight computer that integrates advanced processors, accelerometers, gyroscopes, magnetometer, barometer, compass, and GPS. Additional systems that are controlled by the flight computer include the pitot-static system and telemetry system. The flight computer data referenced in this manual is from the 3DR Pixhawk operating manual.

Pitot-Static System

The pitot-static system is a subsystem of the flight computer and provides IAS that is converted to a true airspeed that allows for wind computation by the flight computer. The pitot-static system provides this additional airspeed information that allows for more precise autopilot functions such as auto landing and improved slow flight.

NOTE

The pitot-static system is tested during the Prelaunch Checklist to ensure its properly working.

Telemetry System

A subsystem of the flight computer, the telemetry system provides the ability to transmit and receive flight computer information from a remote ground station. The telemetry system is not required to keep the aircraft safely airborne, but rather gives a secondary method of changing flight plans and providing aircraft flight computer data. On the aircraft, a transceiver with antenna is used to relay data and receive commands from the ground station.

The frequency utilization for the telemetry system is shown below.

Frequency	Output
915 MHz	100 mW

Figure 4-3 Telemetry Frequency Utilization

Data that is transferred to the ground station include airspeed, altitude, attitude indicator, VSI, HSI, location, and GPS link strength. The telemetry system is checked during the Prelaunch Checklist.

Flight Computer Preflight/Daily Inspection

During the daily and preflight inspection, the flight computer is checked for proper and secure wire connections. In addition, the flight computer is positioned forward and centered to the longitudinal axis of the MM Skyward 1.

The flight computer sub components (pitot-static system and telemetry system) are checked during the Prelaunch Checklist. In

addition, the assisted flight modes (stabilize and fly by wire) are checked during the Prelaunch Checklist as well. The GPS is verified that it is locked during the Prelaunch Checklist.

Flight Computer Routine Inspection

The flight computer is monitored during the use of a ground station. Any time the flight computer is not operating normally, the flight computer should have routine maintenance performed.

After the 50 flight hour interval, the flight computer's wires and circuit boards are inspected. The flight computer wires are disconnected and cleaned with a brush and light air pressure.

After the 100 flight hour interval, maintenance is performed to the flight computer that includes inspecting wires for fraying, cleaning the circuit board, inspection of the circuit board, and updating the latest firmware.

If any major damage is observed to the circuit board, then the flight computer shall be replaced. After the routine inspection, the MM Skyward 1 receives a FCF with a record entry made in the maintenance log for the associated aircraft.

NOTE

The latest manufacturer safety bulletin shall be followed.

Flight Computer Overhaul/Time in Service

The flight computer is replaced any time significant damage is discovered on the circuit board. If any component of the circuit board displays fatigue or degradation, then the flight computer is replaced. The flight computer serves no more than 750 flight hours, regardless of condition. All flight computer subcomponents are replaced at this time as well.

4.10 TRANSMITTER

The transmitter is the primary flight controller, and telemetry with the ground station is a secondary means of flight control.

NOTE

The PIC must be prepared to take control of the aircraft quickly in the event the telemetry control fails.

The transmitter provides the flight control movements and throttle settings necessary for manual or assisted flight

control of the aircraft. In addition to the transmitter providing control of the aircraft, the transmitter also has four additional channels used for flight mode changes and payload operations. The transmitter has the option to utilize separate telemetry from the flight computer. This telemetry provides battery voltage and ESC temperature monitoring.

The transmitter utilized with the MM Skyward 1 is the Spektrum DX8. The transmitter and receiver provide failsafe operations that add safety features to the operation of the MM Skyward 1. With the throttle channel, the safety feature prevents the motor from operating when the receiver is only ON. Another failsafe is the ESC does not arm unless the throttle is set to zero. An additional feature of the transmitter is a battery alarm sounds when the battery reaches 4.3V.

The transmitter frequency spectrum is shown in the figure.

Frequency	Output
2.4 to 2.4835 GHz	100 mW

Figure 4-4 Transmitter Frequency Utilization

Transmitter Daily Inspection

The transmitter is initially checked to ensure all switches are in the proper location. Alarms are built-in to alert the PIC that switches are not in the proper location. In the event the throttle is not set to zero, an alert is triggered. In the event a payload switch is not in its prelaunch location, an alert is triggered as well.

The importance of a range test ensures a good transmitter is working with the receiver. During this test, a reduced power output is transmitted. This range test is accomplished from 90 feet away from the MM Skyward 1 and shall be conducted before all flight events to ensure the transmitter and receiver are operating normally.

NOTE

The latest manufacturer safety bulletin shall be followed.

Transmitter Routine Inspection

At each 100 flight hour interval, the transmitter is inspected for loose screws and switches. Also, the battery health is analyzed to determine if the battery should be replaced. An advanced range check is conducted as well.

Transmitter Overhaul/Time in Service

The transmitter will not be opened at anytime to be inspected unless there is a need to make adjustments inside (e.g., set the control stick tension). If there is an issue with the transmitter, then it is sent back to the manufacturer for repair or is replaced. The transmitter is replaced after 1,000 flight hours regardless of its condition.

4.11 GROUND STATION

A laptop computer with flight event software and a telemetry transceiver with antenna comprise the ground station.

As the life of the laptop computer ages, the battery life severely degrades; therefore, it is strongly encouraged that the laptop has an Alternating Current (AC) electrical source. If the AC electrical source is unavailable, then a backup laptop battery should be available.

The computer software shall be kept up to date with the latest manufacturer operating version. Also, the computer must utilize an anti-virus to ensure malware or other viruses do not corrupt the system, severely degrading the performance.

Because the ground station augments the operations, the ground station can have a total failure, and the MM Skyward 1 can be safely recovered. The ground station enhances the situational awareness of the operations but is not required to successfully execute a flight event.

NOTE

During flight events above 330 feet AGL, the ground station shall be utilized in order to verify the GPS triangulated altitude of 400 feet AGL is not violated. The PIC ensures the GPS altitude is initiated at a zero altitude point as part of the Prelaunch Checklist.

4.12 BATTERIES

The power source for the MM Skyward 1 is LiPo batteries. These batteries require safety awareness and proper handling to ensure the LiPo battery does not overheat and possibly catch fire.

WARNING

Failure to follow appropriate safety guidelines could lead to an overheated battery that may lead to a fire causing a potential hazardous situation.

WARNING

Ensure any battery that is damaged is appropriately discarded. Damaged cells can create a condition where batteries can ignite and cause a fire causing a potential hazardous situation.

Charging/Discharging/Balancing

Charging procedures for LiPo batteries require only LiPo specific battery chargers, set to the appropriate cell count for the respective battery to be charged. Slow charges are recommended and the balance of each cell should be kept relatively close to each cell. Care should be taken to avoid imbalances of each cell (i.e., do not allow individual cells to exceed 0.1 volts in comparison).

NOTE

In cases where cells must be balanced, attempt one balance and if it is unsuccessful, then carefully discharge the battery and properly dispose of the failed battery.

A metal or other non combustible surface shall be used when recharging batteries. Special attention must be given during the first few minutes of charging to ensure proper charging has taken place. Batteries shall never be left unattended during a charging/discharging/balancing process. A well ventilated area and a fire extinguishing agent should be within close proximity during battery charging/discharging/balancing process.

The LiPo battery shall never exceed 4.2 volts per cell. To allow the battery to discharge below 3.0 volts per cell, the battery experiences irreversible damage. In this case of over discharge, the battery shall be disposed properly. For storage, the LiPo

battery should be stored at 3.8 volts per cell (50% of the useful charge).

Storage

Batteries shall be stored in fire retardant woven fabric bags (LiPo Bags) at all times not in use. The storage shall be kept in a well ventilated area and temperatures should never exceed 130°F or the manufacturer recommendation, whichever is lower.

Battery Inspections

Batteries are inspected every flight and during charging/discharging/balancing processes. If any abnormalities occur such as puffs of smoke or excessive swelling, then the battery shall be properly discharged and recycled.

During charging/discharging/balancing processes, the maximum voltage and internal resistance are monitored in order to forecast the battery's performance capability. A battery struggling to reach its maximum voltage or an increasing internal resistance could be an early sign of battery degradation. This battery should be monitored closely in its performance and consideration should be made in regards to retiring the battery.

NOTE

The latest manufacturer safety bulletin shall be followed.

Battery Service Life

Batteries should be recycled after 300 full cycles. Batteries may need to be retired much sooner due to operational conditions such as extreme temperatures or moisture exposure. If a battery begins to lose its ability to maintain the maximum voltage per cell (4.2V), then consideration should be made to retiring this battery.

NOTE

The relative internal resistance should be monitored in order to forecast possible battery degradation.

If a battery is not consistently performing to its standard, then this battery should be recycled. If a battery shows signs of excessive swelling (i.e., thermal runaway), then this battery shall be properly discharged and recycled. In addition,

punctured battery cells shall be properly discharged and recycled.

4.13 CENTER OF GRAVITY

The center of the MM Skyward 1 concentrated mass is at the middle-forward portion of the wing. The center of gravity is checked after overhauls or replacement components to ensure the aircraft properly balances at this point on the aircraft.

The PIC is responsible for ensuring that the aircraft's balance is acceptable before each flight event. The figure below shows the point at which the center of gravity is located on the MM Skyward 1.

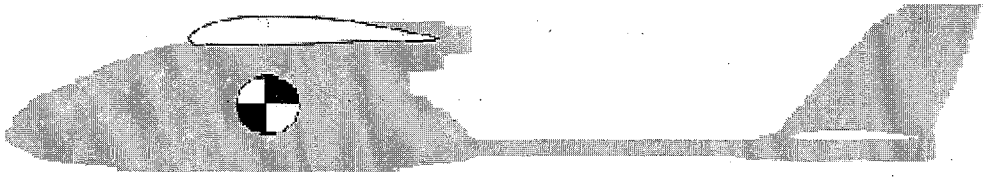

Figure 4-5 Center of Gravity

4.14 FUNCTIONAL CHECK FLIGHTS

A FCF shall be conducted when MM Skyward 1 critical components (e.g., motor, ESC, receiver, flight computer, servos) are overhauled or replaced.

FCF Procedures

For an FCF event, the Normal Procedures from this Manual apply unless specific deviations are required to ensure proper control of the aircraft.

The FCF shall be completed with a minimum crew of the PIC and VO. Personnel should be minimized during the FCF event operating area. A daily inspection is required prior to the FCF along with a thorough preflight with special attention placed on the overhauled or replaced component.

For an FCF event, the FCF PIC shall be briefed by a qualified technician about the execution of required checks. The technician gives a list of the replaced components, and the FCF PIC shall conduct each evaluation check. The required checks are to be completed in the most logical and efficient order. The FCF

PIC shall be familiar with these requirements prior to the check.

FCF Checklist

For all FCF events, all checklist procedures are conducted in accordance with the Normal Procedures chapter of this Manual. With the following exceptions, the Preflight Checklist concentrates emphasis on the component(s) that were overhauled or replaced. The Launch Checklist step 3, Flight Mode, shall be initially operated in the MANUAL mode only. The Climb/Event Checklist will be replaced with the following checklist.

FCF CLIMB/EVENT CHECKLIST

1. Altitude--------- CLIMB TO A SAFE ALTITUDE (Min 250 feet AGL)

2. Ground Station---------- As Required

3. FCF Evaluation Check---------- As Required

4. Flight Mode---------- STABILIZE/CHECK

5. Flight Mode---------- FLY BY WIRE/CHECK

6. Flight Mode---------- RETURN TO LAND/CHECK (If Applicable)

7. Flight Mode---------- LOITER/CHECK (If Applicable)

8. Flight Mode---------- AUTONOMOUS/CHECK (If Applicable)

9. Flight Mode---------- As Required

FCF Evaluation Check

For the FCF evaluation check, the technician gives a list of performance test requirements to the FCF PIC based on the overhaul or replaced components.

The FCF evaluation for the following components includes:

1) Servo(s) evaluation of pitch/roll/yaw performance
2) Motor performance checks
3) ESC performance check and verification of motor brake disengagement
4) Propeller balancing with acceptable airframe vibration
5) Receiver range check functions

6) Flight computer flight mode checks and telemetry data verification

The FCF evaluation checks are provided by the FCF technician to be performed during step 3 of the FCF Climb/Event Checklist. The FCF PIC establishes a flight profile for each FCF evaluation check and conduct the event in its most efficient manner.

After the FCF is flown, an entry is made in the MM Skyward 1's maintenance log, and the status of the FCF recorded.

APPENDIX

ACRONYMS

Acronym	Definition
A	Ampere
AC	Alternating Current
AGL	Above Ground Level
BEC	Battery Eliminator Circuit
COA	Certificate of Authorization
CRM	Crew Resource Management
DC	Direct Current
EP	Emergency Procedure
ESC	Electronic Speed Controller
FAA	Federal Aviation Administration
FCF	Functional Check Flight
FSDO	Flight Standards District Office
GHz	Gigahertz
GPS	Global Positioning System
GS	Ground Speed
HSI	Horizontal Situation Indicator
IAS	Indicated Airspeed
KV	RPM per Volt (no load)
LiPo	Lithium-Polymer
mA	Milliamp
MHz	Megahertz
MM	Marek Management
mW	Megawatt
NAS	National Airspace System
NOTAM	Notice to Airmen
PIC	Pilot in Command
RPM	Revolutions per Minute
sUAS	Small Unmanned Aircraft System

Acronym	Definition
TFR	Temporary Flight Restriction
UA	Unmanned Aircraft
V	Volt
VLOS	Visual Line of Sight
VSI	Vertical Speed Indicator
VO	Visual Observer
W	Watt

Marek Management Skyward 1 Operations Manual