January 9, 2015

U. S. Department of Transportation
Docket Management System
1200 New Jersey Ave, SE
Washington, DC 20590

Re: Exemption Request Section 333 of the FAA Reform Act of the Federal Aviation Regulations from 14 C.F.R. 45.23(b); 14 C.F.R. Part 21; 14 C.F.R. 61.113(a)&(b); 91.7(a); 91.9(b) (2); 91.103(b); 91.109; 119.121; 91.151(a); 91.203(a)&(b); 91.405(a); 91.407(a) (1); 91.409(a) (2); 91.417(a)&(b)

Dear Sir or Madam,

I, Bruce Pogosaew, am writing pursuant to the FAA Modernization and Reform Act of 2012 and the procedures contained within 14 C.F.R. 11, to request that I, Bruce Pogosaew,
an owner and operator of small unmanned aircraft, be exempted from the Federal Aviation Regulations ("FARs") listed below so that I, Bruce Pogosaew, may operate my small ultra lightweight unmanned aircraft system ("UAS") in commercially regulated airspace by the Federal Aviation Administration ("FAA").

As described herein I, Bruce Pogosaew, have experience in flying hobby helicopters and planes for recreational purposes for the past eighteen (18) years. I have flown small and large remote control (RC) gas and electric aircraft models for those eighteen (18) years without incident and pledge my continued commitment to safety on all future flights.

Following exemption and approval by the FAA, I, Bruce Pogosaew, will primarily use my hobby grade quad-copter[1] and fixed wing[2] UAS equipped with cameras for the following applications: aerial videography/cinematography to enhance academic community awareness for individuals and companies unfamiliar with the geographical layout of the metro Tucson and surrounding areas; augmentation of real estate listing videos; and the creation of visual and topography layout videos for Search and Rescue (SAR) missions for state and local agency's, education, agricultural inspections and building and construction zone inspections.

[1] Appendix A - Bixler 2 Operator Manual [2] Appendix B - Quad-Copter Operator Manual

My, Bruce Pogosaew's, exemption request would permit the operation of ultra lightweight, unmanned (i.e. piloted by remote control) UAS's for the development of community and government use videos, permissible within property boundaries for individual homeowners and within in tightly controlled, limited airspaces predetermined in areas away from the general public, airports, heliports and vehicular traffic. Currently, similar lightweight, remote controlled UAS's are legally operated by unmonitored amateur hobbyists with no safety plan or controls in place to prevent catastrophe. With that in mind, I, Bruce Pogoaew, have personally installed safety protocols and controls[6] to avoid and prevent public hazard, as well as any catastrophic manned aircraft hazard. Furthermore, it is my intent to assist future FAA safety protocols and regulations exclusive to lightweight UAS's for specific video and photography usage by sharing information with the FAA as I, Bruce Pogosaew, record flight data and other pertinent information gained through permitted flight operations.

In addition, granting my, Bruce Pogosaew's, exemption request will comply with the Secretary of Transportation's (FAA Administrator's) instructions to not only integrate UAS's into the national airspace system, but to "...establish requirements for the safe operation of such aircraft systems [UAS's] in the national airspace system" under Section 333(c) of the Reform Act specific to the use of UAS's for real estate/Realtor purposes, educational videos, Search and Rescue, land/trusts inspections, and structure inspections, to aid state and local agency's. Further I, Bruce Pogosaew, will conduct my operations in compliance with the protocols described herein or as otherwise established by the FAA.
For the reasons stated below, I, Bruce Pogosaew, respectfully request the grant of an exemption allowing me to operate ultra lightweight, remote controlled UAS's to aid academic community awareness, to benefit/stimulate attraction to the metro Tucson area and to enhance personal and public video feeds. A grant that will ultimately allow UAS's to play a more positive role in our local community by increasing employment opportunities, heightening security measures and decreasing government expenditures by reducing the need for heavier manned aircraft, containing costly, combustible fuel- a potential public hazard in and of itself.

6 Appendix F - Personal Protocols and Controls

I. Contact Information:
Bruce Pogosaew
FPV CATALOG, LLC
7432 E Placita Del Espiritu
Tucson, AZ 85715
Office: (520) 495-4674
Mobile: (520) 271-9630
Email: service@FPVCATALOG.com

II. The Specific Sections of Title 14 of the Code of Federal Regulations From Which Bruce Pogosaew Requests Exemption are:
14 CFR 21;
14 C.F.R. 45.23(b);
14 CFR 61.113 (a) & (b);
14 C.F.R. 91, et seq.;
14 CFR 407 (a) (1);
14 CFR 409 (a) (2); and,
14 CFR 417 (a) & (b).

III. The Extent of relief Bruce Pogosaew Seeks and the Reason He Seeks Such Relief:
I, Bruce Pogosaew, submit this application in accordance with the Reform Act, 112 P.L. 95 §§ 331-334, seeking relief from any currently applicable FARs operating to prevent me, Bruce Pogosaew, contemplated commercial cinematic, academic and other flight operations within the national airspace system. The Reform Act in Section 332 provides for such integration of civil unmanned aircraft systems into our national airspace system as it is in the public's interest to do so. My, Bruce Pogosaew's, ultra lightweight UAS meets the definition of "small unmanned aircraft" as defined in Section 331 and therefore the integration of my ultra light weight UAS is expressly contemplated by the Reform Act. I would like to operate my ultra lightweight UAS prior to the time period by which the Reform Act requires the FAA to promulgate rules governing such craft. Thereby, providing direct experience and valuable information for formal regulation that can be administered uniformly to all related UAS aerial video and photography. The Reform Act guides the Secretary in determining the types of UAS's that may operate safely in our national airspace system. Considerations include: The weight, size, speed and overall capabilities of the UAS's; Whether the UAS will be operated near airports or heavily populated areas; and, Whether the UAS will be operated by line of sight. 112 P.L. 95 § 333 (a).

Each of these items reflect in favor of an exemption for me, Bruce Pogosaew.
My UAS's utilize four (4) or less rotating propellers
for balance, control and stability.
My UAS's are equipped with the following via video and data telemetry :

1)Altimeter
2) Attitude indicator
3) Ground Speed indicator
4) Magnetic compass
5) Heading indicator
6) Vertical speed indicator
7) Course deviation indicator
8) Radio magnetic indicator
9) GPS location
10) Fuel consumption and Fuel Left with approximate time.
11) Loiter and circle mode.
12) Auto safety or RTL (Return To Launch)
13) Auto landing technology.

Each UAS weighing less than seven (7) pounds (far below the maximum 55 pound limit);
Including camera(s) with or without gimbal (a camera stabilizer).
I, Bruce Pogosaew, considers safety as foremost with each flight. My small unmanned aircraft is designed to hover in place, circle in a specific place or loiter(figure 8 flight) via GPS and can be operated in winds up to 17.379 knots (20mph) wind. For safety, stability and fear of financial loss I will not fly in winds exceeding 13 knots (15 mph). Built in safety systems include a GPS mode that allows my UAS to hover/circle in place or land when radio controls are released.
With six (6) modes to choose from, I will fly with the modes safest to complete the videos
for aerial videography/photography and have the ability to choose the safest, most reliable and stable mode to prevent accident and hazard. When pilot communication is lost, UAS is designed slowly descend to point of takeoff and or to land at point of launch.
With an onboard flight controller - APM2.5, it has the capabilities of geofencing[4] which will prevent the craft from exceeding a set altitude or distance. No matter
what causes the craft to breach those boundaries - the craft is forced back within the boundary limits via the on board controller and will take over the craft to keep it within those set boundary lines and allow the pilot to regain control once the craft is within those boundaries.
I, Bruce Pogosaew, will not operate my UAS near airports, hospitals nor police heliports, and do not operate near areas where general public is within fifty to one hundred (50-100) yards depending on location, conditions and weather. I am constantly on alert for any manned aircraft (police/medical helicopters, etc.) and prepared to land/abort immediately to the nearest and safest ground point should a manned aircraft approach my location or I suspect manned aircraft may

[4] **Appendix D - Computerized Control Boards**

approach near my location. My UAS's are capable of vertical and horizontal operations, and is flown only within my line of sight, as the remote control pilot. Utilizing battery power rather than combustible

I, Bruce Pogosaew, will not operate my UAS near airports, hospitals nor police heliports, and do not operate near areas where general public is within fifty to one hundred (50-100) yards depending on location, conditions and weather. I am constantly on alert for any manned aircraft (police/medical helicopters, etc.) and prepared to land/abort immediately to the nearest and safest ground point should a manned aircraft approach my location or I suspect manned aircraft may approach near my location. My UAS's are capable of vertical and horizontal operations, and is flown only within my line of sight, as the remote control pilot. Utilizing battery power rather than combustible fuels, flights generally last between three (3) to fifteen (15) minutes, with an altitude under one hundred fifty (150) feet. Six (6)Smart Mode includes safe circle for operation, position hold, self-leveling, altitude command, GPS, return home feature, and safety control to return home or land in the event of communication interruption between RC transmitter and UAS.[See Appendix A, and C -Operator Manual.]

I, Bruce Pogosaew, utilize a fresh fully charged battery with each flight as a safety precaution; full flight time limit for each battery is eight (8) to twelve (30) minutes as tested. I do not operate my UAS at or below manufacture recommend minimum charge levels for operation; preferring to remain well within a safe operating range to insure adequate communication between radio control and UAS to eliminate potential for crash, loss of control or hazard. Reserve batteries are at hand with each exercise to insure replacement for sufficient safe level of operation. I do not believe in taking risk that may cause a crash, that could create hazard to the public/property/manned aircraft, and have no desire to lose an investment. I have clocked numerous practice flights in remote areas as a hobbyist simulating flights for future commercial use to gain familiarization with the characteristics of this specific UAS's performance under different temperature and weather conditions. I also practice computerized simulated flights to maintain adequate skills and response reflex time. All for the sake of safety. I, Bruce Pogosaew, am extremely cautious when operating of my UAS/ultra light weight unmanned aircraft and will not "create a hazard to users of the national airspace system or the public." 112 P.L. 95 § 333 (b). Given the small size and weight of my UAS it falls well within Congress's contemplated safety zone when it promulgated the Reform Act and the corresponding directive to integrate UAS's into the national airspace system. Bruce Pogosaew's UAS, used in hobby flight, has a demonstrable safety record and does not pose any threat to the general public or national security.

IV. How Bruce Pogosaew's Request Will Benefit the Public As A Whole:

Aerial videography for geographical awareness, education, search and rescue, land management, structure inspections and for real estate marketing has been around for a long time through manned fixed wing aircraft and helicopters. For small budget companies, average homeowners and property owners the expense of such aerial videography is cost prohibitive. Only large companies and high end Realtors or luxury homeowners can afford to absorb such expense. Depriving non-luxury owners and lower budget companies from a valuable marketing tool. Manned aircraft pose a threat to the public through potential catastrophic crash that the Tucson community has experienced in the past with military aircraft and medical helicopter crashes within the city of Tucson. Each resulting in loss of life.

1 Appendix A - Bixler 2 Operator Manual 2 Appendix B - Quad-Copter Operator Manual 3 Appendix C - Transmitter Controller Manual

Each with combustible fuel that exploded and burned on impact. Police helicopters have made emergency hard landings within city limits. My, Bruce Pogosaew's, UAS poses no such threat since size and lack of combustible fuel alleviates any potential threat to the public. Congress has already proclaimed that it is in the public's interest to integrate commercially flown UAS's into the national airspace system, hence the passing of the Reform Act. Granting my, Bruce Pogosaew's, exemption request furthers the public interest through academic/visual awareness of the geographical benefits in and around the metro Tucson area. My ultra light weight UAS is battery powered and creates no emissions that can harm the environment. The consequence of my ultra light weight UAS crashing is far less than a full size helicopter or fixed wing aircraft; which are heavy, contain combustible fuel and can cause catastrophic devastation to the public. The public's interest is furthered by minimizing ecological and crash threat by permitting aerial video/photo capture through my battery operated ultra lightweight UAS's.

Permitting me, Bruce Pogosaew, to immediately fly within national air space furthers economic growth. Granting my exemption request substantially furthers the economic impact for the metro Tucson and surrounding community for companies looking to relocate or build around the Tucson metro area as well as individuals looking to relocate for career advancement through academic and geographical awareness. Both of which serve as a stimulus to the community.

V. Reasons Why Bruce Pogosaew's Exemption Will Not Adversely Affect Safety Or How The Exemption Will Provide a Level of Safety At Least Equal To Existing Rule:

My, Bruce Pogosaew's, exemption will not adversely affect safety. Quite the contrary, for the reasons stated permitting me, Bruce Pogosaew, to log more flight time in FAA controlled airspace, with communication with the FAA, will allow me to contribute to the innovation and implementation of new and novel, as of yet undiscovered safety protocols for Realtors, land and structured owners. For development in cooperation with the FAA.

In addition I, Bruce Pogosaew, submit the following representations of enhancements to current aerial videography and photography:

My UAS's weigh less than seven (7) pounds complete with a small ultra-light weight high quality GoPro 3+ Black camera; Mobius camera or similar;

I only operate my UAS below 200 feet (well within the 400 foot permissible ceiling set by the FAA Modernization and Reform Act of 2012);

My UAS only operate for 3-15 minutes per flight;

I land my UAS prior to manufacturer recommended minimum level of battery power;

I pilot my UAS through remote control only by line of sight; and have live video feed for a secondary pilot to monitor video recording;

My UAS's have a GPS controlled main frame- a flight safety feature whereby it hovers or circles and then lands at the GPS takeoff point if communication with the remote control pilot is lost;
I actively record and analyze flight data through the APM main frame and other sources of information to constantly
update and enhance safety protocols;
I only operate in reasonably safe environment that are strictly controlled, are away from power lines, elevated lights, airports and actively populated areas;
I conduct extensive preflight inspections and protocol, during which safety carries primary importance;
I always obtain all necessary permissions prior to operation; and,
I have procedures in place to abort flights in the event of safety breaches or potential danger.
My, Bruce Pogosaew's, safety protocols provide a level of safety equal to or exceeding existing rules. It is important to note that absent the integration of commercial UAS into our national airspace system, helicopters are the primary means of aerial video and photography for community awareness real estate, structured inspections, land management and search and rescue While the safety record of such helicopters is remarkably astounding, there has been local incident involving loss of life as well as extensive property damage; it is far safer to operate a battery powered ultra lightweight UAS. First, the potential loss of life is diminished because UAS's carry no people on board and I only operates my UAS in specific areas away from mass populations. Second, there is no fuel on board a UAS and thus the potential for fire or explosions is greatly diminished. Third, the small size and extreme maneuverability of my UAS allow me to remotely pilot away from and avoid hazards quickly and safely. Lastly, given its small size and weight, even when close enough to capture
amazing images, my UAS need not be so close to the objects they are focused on through the technology and use of post editing software allowing pan and zoom. Accordingly, my UAS has been experimentally operated for familiarization/competency and will continue to operate at and above current safety levels.
VI. A Summary The FAA May Publish in the Federal Register:
A. 14 C.F.R. 21 and 14 C.F.R. 91: Airworthiness Certificates, Manuals and The Like.
14 C.F.R. 21, Subpart H, entitled Airworthiness Certificates, sets forth requirements for procurement of necessary airworthiness certificates in relation to FAR §91.203(a)(1). The size, weight and enclosed operational area of my, Bruce Pogosaew's, UAS permits exemption from Part 21 because my UAS meets (and exceeds) an equivalent level of safety pursuant to Section 333 of the Reform Act.
The FAA is authorized to exempt aircraft from the airworthiness certificate requirement under both the Act (49 U.S.C. § 44701 (f)) and Section 333 of the Reform Act. Both pieces of legislation permit the FAA to exempt UAS's from the airworthiness certificate requirement in consideration of the weight, size, speed, maneuverability and proximity to areas such as airports and dense populations. My, Bruce Pogosaew's, current and projected UAS's meet or exceed each of the elements.

14 C.F.R. 91.7(a) prohibits the operation of an aircraft without an airworthiness certificate. As no such certificate will be applicable in the form contemplated by the FARs, this Regulation is inapplicable.

14 C.F.R. § 91.9 (b) (2) requires an aircraft flight manual in the aircraft. As there are no on board pilots or passengers, and given the size of the UAS's, this Regulation is inapplicable. An equivalent level of safety will be achieved by maintaining a safety/flight manual delineating areas of where safety can be defined.

The FAA has previously issued exemptions to this regulation in Exemption Nos. 8607, 8737, 8738, 9299, 9299A, 9565, 9565B, 10167, 10167A, 10602, 10700 and 32827.

14 C.F.R. § 91.121 regarding altimeter settings is inapplicable insofar as my UAS utilizes electronic global positioning systems with a barometric sensor or controled GPS “geofencing”

14 C.F.R. § 91.203 (a) and (b) provides for the carrying of civil aircraft certifications and registrations. They are inapplicable for the same reasons described above. The equivalent level of safety will be achieved by maintaining any such required certifications and registrations by me, Bruce Pogosaew.

B. 14 C.F.R. § 45.23: Marking of The Aircraft.
Applicable Codes of Federal Regulation require aircraft to be marked according to certain specifications. My UAS are, by definition, unmanned. They therefore do not have a cabin, cockpit or pilot station on which to mark certain words or phrases. Further, two-inch lettering is difficult to place on such small aircraft with dimensions smaller that minimal lettering requirement. Regardless, I will mark its UASs in the largest possible lettering by placing the word “EXPERIMENTAL” on its fuselage as required by 14 C.F.R. §45.29 (f) so that I the pilot, or anyone assisting me as a spotter with the UAV will see the markings. The FAA has previously issued exemptions to this regulation through Exemptions Nos. 8738, 10167, 10167A and 10700.

C. 14 C.F.R. § 61.113: Private Pilot Privileges and Limitations: PIC.
Pursuant to 14 C.F.R. §§ 61.113 (a) & (b), private pilots are limited to non-commercial operations. I, Bruce Pogosaew, can achieve an equivalent level of safety as achieved by current Regulations because my UAS does not carry any pilots or passengers. Further, while helpful, a pilot license will not ensure remote control piloting skills. The risks attended to the operation of my UAS is far less than the risk levels inherent in the commercial activities outlined in 14 C.F.R. § 61, et seq. Thus, allowing me, Douglas Trudeau, to operate my UAS meet and exceed current safety levels in relation to 14 C.F.R. §61.113 (a) & (b).

D. 14 C.F.R. 91.119: Minimum Safe Altitudes.
14 C.F.R. § 91.119 prescribes safe altitudes for the operation of civil aircraft. It allows helicopters to be operated at lower altitudes in certain conditions. My UAS will never operate at an altitude greater than 200 AGL; safely below the standard of 400 AGL. I, Bruce Pogosaew, will however operate my UAS in safe areas away from public and traffic, providing a level of safety at least equivalent to or below those in relation to minimum safe altitudes. Given the size, weight, maneuverability and speed of my UAS, an equivalent or higher level of safety will be achieved.

E. 14 C.F.R. 91.405 (a); 407 (a) (1); 409 (a) (2); 417(a) & (b): Maintenance Inspections.
10 Appendix E - Safety/Flight Manual

The above-cited Regulations require, amongst other things, aircraft owners and operators to "have [the] aircraft inspected as prescribed in subpart E of this part and shall between required inspections, except as provided in paragraph (c) of this section, have discrepancies repaired as prescribed in part 43 of this chapter. . . ."These Regulations only apply to aircraft with an airworthiness certificate. They will not, therefore, apply to my, Bruce Pogosaew's, UAS. However, as a safety precaution I inspect my UAS before and after each flight.

A Summary The FAA May Publish in the Federal Register: A. 14 C.F.R. 21 and 14 C.F.R. 91: Airworthiness Certificates, Manuals and The Like. 14 C.F.R. 21, Subpart H, entitled Airworthiness Certificates, sets forth requirements for procurement of necessary airworthiness certificates in relation to FAR § 91.203(a)(1). The size, weight and enclosed operational area of my UAS permits exemption from Part 21 because my, Bruce Pogosaew's, UAS meets an equivalent level of safety pursuant to Section 333 of the Reform Act. The FAA is authorized to exempt aircraft from the airworthiness certificate requirement under both the Act (49 U.S.C. § 44701 (f)) and Section 333 of the Reform Act. Both pieces of legislation permit the FAA to exempt UAS's from the airworthiness certificate requirement in consideration of the weight, size, speed, maneuverability and proximity to areas such as airports and dense populations. My UAS meets or exceeds each of the elements. 14 C.F.R. 91.7(a) prohibits the operation of an aircraft without an airworthiness certificate. As no such certificate will be applicable in the form contemplated by the FARs, this Regulation is inapplicable. 14 C.F.R. § 91.9 (b) (2) requires an aircraft flight manual in the aircraft. As there are no pilots or passengers, and given the size of the UAS's, this Regulation is inapplicable. An equivalent level of safety will be achieved by maintaining a manual. The FAA has previously issued exemptions to this regulation in Exemption Nos. 8607, 8737, 8738, 9299, 9299A, 9565, 9565B, 10167, maintenance program that involves regular software updates and curative measures for any damaged hardware. Therefore, an equivalent level of safety will be achieved.

In summary, Bruce Pogosaew seeks an exemption from the following Regulations:14 C.F.R. 21, subpart H; 14 C.F.R. 45.23(b); 14 C.F.R. §§ 61.113 (a) & (b); 14 C.F.R. §91.7 (a); 14 C.F.R. § 91.9 (b)(2); 14 C.F.R. § 91.103(b); 14 C.F.R. § 91.109; 14 C.F.R. §91.119; 14 C.F.R. § 91.121; 14 C.F.R. § 91.151(a); 14 C.F.R. §§ 91.203(a) and (b); 14 C.F.R. § 91.405 (a); 14 C.F.R. § 91.407 (a)(1); 14 C.F.R. § 91.409 (a)(2); 14 C.F.R. § 91.409 (a) (2); and, 14 C.F.R. §§ 91.417 (a) & (b)

to commercially operate my, Bruce Pogosaew's, small unmanned vehicle/lightweight unmanned aircraft vehicle in community awareness, education, structural inspection land management, search and rescue and real estate operations, and to develop economic platforms for the aforementioned to

enhance the experience of those seeking to relocate, rebuild, reevaluate and to find in the metro Tucson area.

Currently, the aforementioned aerial videography/photography relies primarily on the use of larger aircraft running on combustible fuel. Posing potential risk to the public. Granting my, Bruce Pogosaew's, request for exemption will reduce current risk levels and thereby enhance safety. My UAS craft do not contain potentially explosive fuel, is smaller, lighter and more maneuverable than conventional video and photographic aircraft with much less flight time.

Further, I operate at lower altitudes and in controlled airspace eliminating potential public risk flying to and from established airfields. I, Bruce Pogosaew, have been informally analyzing and recording flight information and will compile safety protocols and the implementation of a flight operations manual for usage that exceeds currently accepted means and methods for safe flight. Formal collection of information shared with the FAA will enhance the FAA's internal efforts to establish protocols for complying with the FAA Modernization and Reform Act of 2012. There are no personnel on board my, Bruce Pogosaew's, UAS and therefore the likelihood of death or serious bodily injury is significantly diminished. My, Bruce Pogosaew's, operation of my UAS, weighing less than seven (7) pounds and travelling at lower speeds within limited areas will provide an equivalent level of safety as that achieved under current FARs. Accordingly I, Bruce Pogosaew, respectfully request that the FAA grant my exemption request and am willing to cooperate in sharing information to benefit the FAA, safety of manned aircraft, and the general public at large.

Respectfully submitted,

Bruce Pogosaew
FPV Catalog, LLC
7432 E Placita Del Espiritu
Tucson, AZ 85715

Appendix A

Bixler 2 Operator Manual

3DR Plane

INSTRUCTIONS

Thank you for purchasing a 3DR Plane!

CONTENTS

1 Fuselage
2 Right wing
3 Left wing
4 Horizontal stabilizer
5 Vertical stabilizer
6 Carbon fiber bar

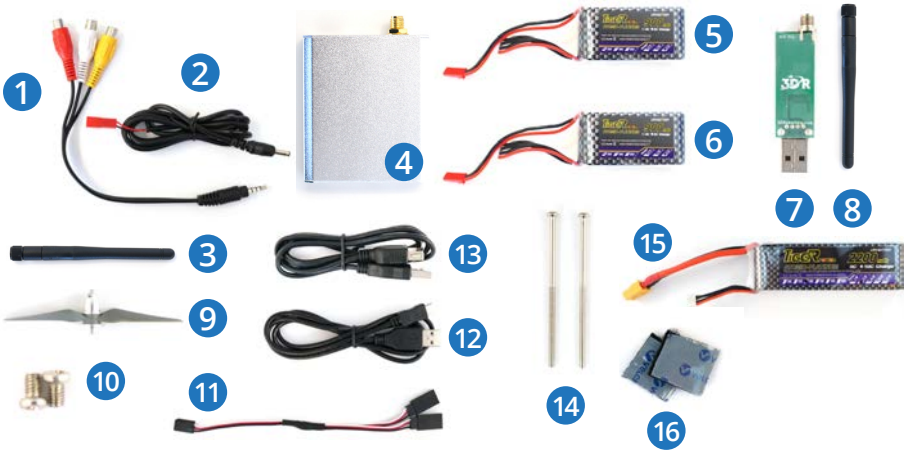

1 Audio/video (AV) cable
2 AV receiver power cable
3 AV receiver antenna
4 AV receiver
5 AV transmitter battery (air)
6 AV receiver battery (ground)
7 Telemetry module (ground)
8 Telemetry antenna (ground)
9 Propeller
10 Servo horn screws
11 Ailerons Y cable
12 Micro-USB cable
13 USB extension cable
14 Wing screws
15 Main battery
16 Adhesive Velcro squares

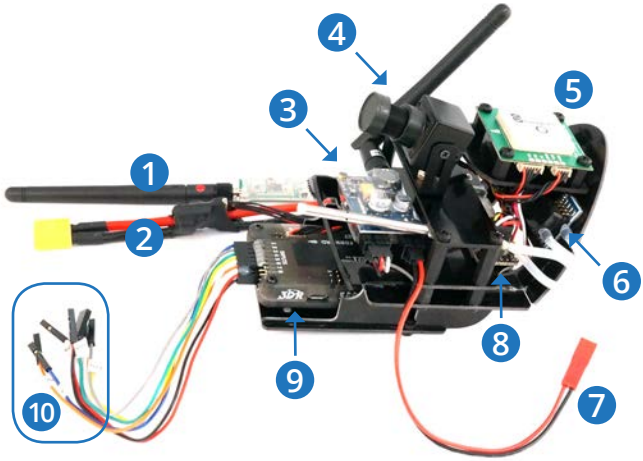

1 Telemetry (air)
2 Power module
3 AV transmitter
4 Camera
5 GPS module
6 Air speed sensor
7 AV transmitter power connector
8 On-screen display board
9 APM
10 Input connectors

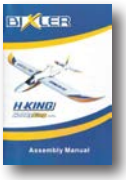

Bixler Assembly Manual

Please refer to the assembly manual included with your plane to install main wings, stabilizers, and other parts of the plane's frame. Use the Y-cable to connect the aileron cables from the left and right wings.

WIRING APM OUTPUTS

Connect the servo and electronic speed controller (ESC) wires to APM's outputs pins in the order indicated below. Connect the white wire to the S pin (top row), the red wire to the + pin (center row), and the black wire to the - pin (bottom row).

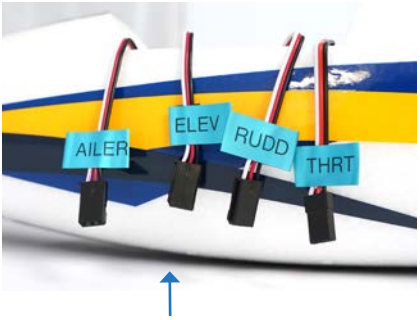

Servo cables are labelled by type. Connect them to APM's output pins as shown.

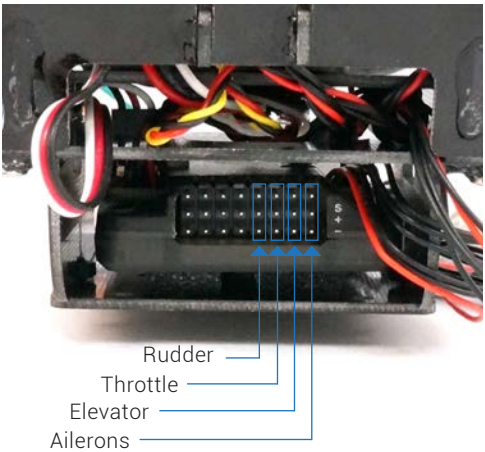

CONNECT RC RECEIVER

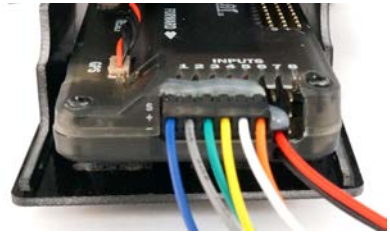

APM inputs wires

Connect the wires from the APM inputs to the signal pins on your RC receiver. The wires are labeled with the channel they should connect to.

Connect the black wire to a ground pin on the receiver, and connect the red wire to a power (five volts) pin on the receiver.

Connect inputs wires to RC receiver

POWER WIRING

Connect the power module's yellow XT60 connectors to the motor and main battery connectors. Connect the AV transmitter battery to the red connector on the transmitter.

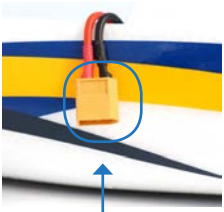

Motor power connector

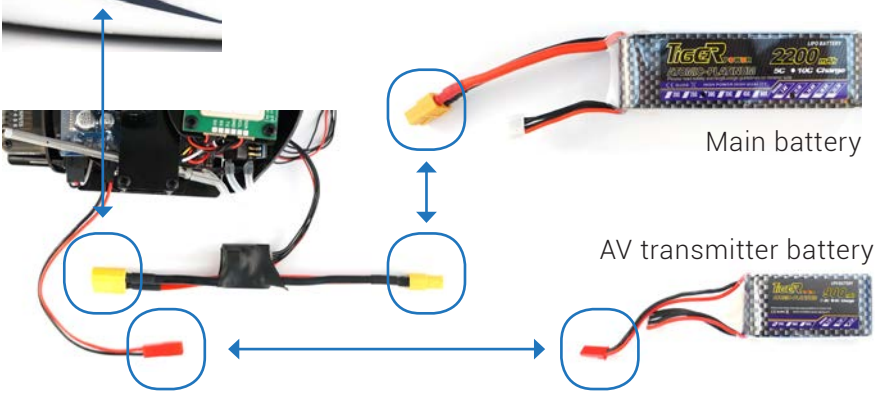

BALANCING THE PLANE

Your plane's center of gravity should be 71 mm from the leading edge. Please balance the plane at this point before flying, and move the main battery as necessary to achieve the correct center of gravity,

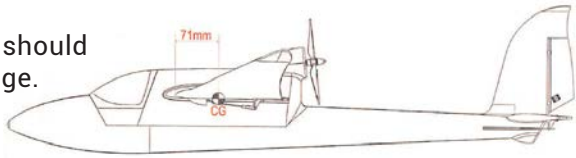

MOUNT TELEMETRY AIR MODULE

Use the adhesive Velcro squares to mount the telemetry radio air module to the side of the fuselage where it has a clear view of the sky.

Your plane is now fully assembled. For software downloads and flying instructions, please visit plane.ardupilot.com. Happy flying!

INSTALL SOFTWARE

Mission Planner is free, open-source software providing multiplatform configuration and full-featured waypoint mission scripting for autonomous vehicles.

To install Mission Planner on your ground station computer (Windows only), visit ardupilot.com/downloads, select Mission Planner, and select sort by date (short link: goo.gl/Si5grC). Select the most recent (top) MissionPlanner - MSI (Microsoft installer package).

Mission Planner Downloads Screen

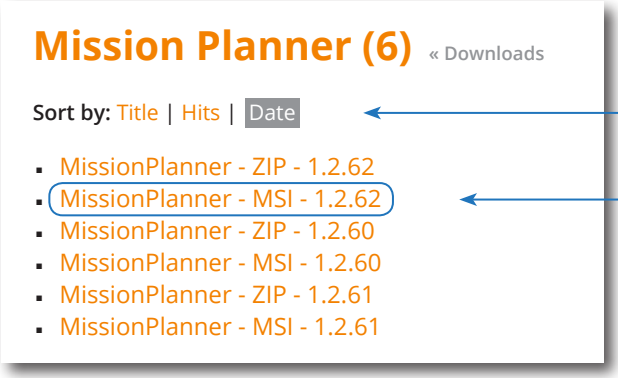

Sort by date.

Select top MSI to download most recent version.

After selecting the most recent MSI, read the safety information and select Download:

Open the downloaded file to run the Mission Planner Setup Wizard. Select the option to proceed if prompted with a security warning.

Device Driver Installation Wizard

Mission Planner Setup Wizard will automatically install the correct device drivers.

Mission Planner Setup Wizard

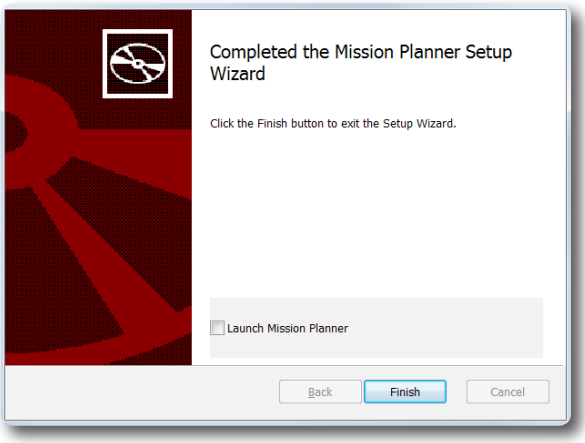

Launch Mission Planner to explore the capabilities of your autonomous vehicle!

Mission Planner will notify you when an update is available; please always run the most current version of Mission Planner.

Mission Planner: Flight Data Screen

For more information on using Mission Planner or troubleshooting your installation, please visit planner.ardupilot.com.

CALIBRATE RADIO CONTROL

Mission Planner's RC calibration utility teaches APM to work with your RC transmitter.

Open Mission Planner. Connect APM to your computer using the provided micro-USB cable.

APM USB port

Windows will automatically install the correct drivers for APM. In Mission Planner, select the COM port for Arduino Mega, set the Baud rate to 115200, and select Connect.

Connect APM to Mission Planner:

1 Select Arduino Mega.

2 Select 115200.

3 Select Connect.

Turn on your transmitter, and ensure it is set to airplane mode (not helicopter mode). In Mission Planner, navigate to Initial Setup, Mandatory Hardware, and Radio Calibration. Select Calibrate Radio. Move the transmitter's sticks and mode switches to all available positions until the red bars are set at the extremes for each control. Select Click when Done to complete RC calibration.

Mission Planner: Radio Calibration Screen

1 Select Hardware.

2 Select Mandatory Hardware.

3 Select Radio Calibration.

4 Select Calibrate Radio.

5 Move transmitter sticks and switches to all positions.

6 Select Click when Done.

To learn about utilizing your plane's autonomous flight modes, designing missions, troubleshooting, multicopter safety, and more, please visit plane.ardupilot.com.

Appendix B

Quad-Copter Operator Manual

Bumblebee-S Manual

使用前请仔细阅读此说明书。
Read the manual carefully before using it

参数特点 Feathurs：

展开状态：

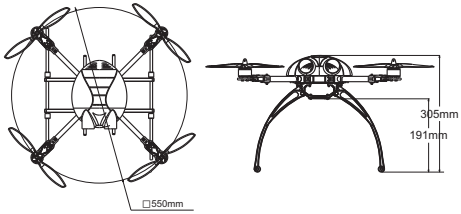

折叠状态：

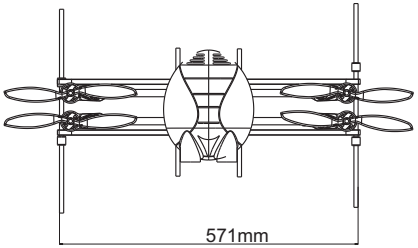

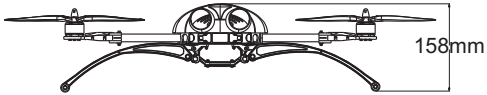

空机重量(Empty Frame Weight)：450g
起飞重量(All Weight)：1200g
建议飞行载重量(Payload Capability)：200~500g
最大安全起飞重量(Maximum Gross Take-Off Weight)：1700g
电池要求（Cell Chemistry)：11.1V 3S 2200uma/h~5500uma/h
Li_poly 电池放电能力（Instant Discharge Capacity)>20C
飞行时间(Flight Time)：>10分钟

轴距(wheelbase)：550mm
整机高度（height)：306mm
折叠后长度(Length Of After Fold)：784mm
折叠后高度(Height Of After Fold)：100mm
桨Propeller：1038*2pcs，1038P*2pcs

3512无刷电机(Brushless Motor)：
重量(Weight)：75g
KV:930rpm/V
空载电流(No_load Current)：0.7A/11.1V
无刷电子调速器（Brushless ESC)：20A * 4pcs

兼容所有模型遥控器和接收机，建议使用6通道以上的遥控器和接收机。
可折叠设计，方便携带和运输。
Compatible with all the RC devices, we recommend you to use RC device with 6 channels or more for expansion.

Before Flight:

DISCLAIMER OF LIABILITY

1.Using the company products within the limits permitted by local laws and regulations. the company is not responsible for any illegal activities.

2.The Bumblebee is an aeromodelling product only. Please strictly follow the aeromodelling safe function rules, the company does not hold responsible for any control over its operation or usage.

3.Model aircraft are not toys! Fly under professional guidance and strictly follow instruction rules in this document. the company is not responsible for consequences caused by improper install, wrong setting or operation.

SAFETY CAUTIONS

1. Familiarize yourself with fly environment and any obstacles. Identify any potential hazards such as power lines, cars, people, etc.

2.Do not fly the aircraft when fatigued, drunk or your mental state has been compromised which may cause an accident.

3.Stay away from wet areas. Do not fly in the rain or wet environments which can cause device failure and probably lead to danger. Do not fly at night or in windy conditions.

4. Stay away from any fire resulting in damage of the electronic parts or others such as the flight battery.

5. Do not fly alone during your preliminary flights. If you need help, please enlist the aid of an experienced pilot before flying for the first time.

6. Prepare rescue tools such as cell phones or other communication devices which should you need to call for help.

7. Please fly under safe take-off weight, do not overload the aircraft which can lead to danger.

8. Ensure all the equipment operates correctly before flight and that there is no transmitter interference or conflicts.

9. Do not touch any moving or powered parts. Do not try to catch the quadcopter which has rotating motors or blades for example. Keep loose clothing away from moving parts as they may get caught and could cause physical harm.

10. Always throttle down to minimum before fly.

11. Remove the propellers when testing the remote device or motors operation. Attach the propellers after you have tested that everything is working good to prevent an accident.

12. Assemble the aircraft with accessories the company provides. the company is not responsible for any consequence resulted from assembly with other accessories or modifications.

Before Flight:

INSPECTIONS BEFORE FLIGHT

PLEASE PAY ATTENTION TO THE AGING AND WORN PARTS, AND FLY WHEN THEY ALL WORK WELL. PLEASE DO CHECK EVERY ASSEMBLY CAREFULLY BEFORE FLIGHT, especially lapses in these parts will easily cause DANGER.

1. Check that the propellers are secured properly.
2. Check that the receiver is receiving a stable signal.
3. Check that the battery is secured tightly and the battery is fully charged.
4. Check that the receiver is attached correctly.
5. Check the antenna is assembled tightly enough.
6. Check that the brushless motor and brushless ESC are secured to the airframe.

Before flight, please assemble receiver or connect ESC to FC as the company factory defaults, if not, please DO CHECK the operations of Remote Control channels and consistence of motor reactions.

FLIGHT CONTROL INSTRUCTION

1. Start: Set the throttle stick to the lowest then turn on the transmitter. Connect the flight battery then slowly apply the throttle until all motors begin to run.
2. Stop: Move the throttle stick to the minimum. All motors should stop to work in about one second. First cut off the Bumblebee then the RC powers off.
3. Any emergency occurs when taking off or landing, please move the throttle stick to the lowest position immediately to keep safe.
4. Flight control to the front, back, left and right is similar to the traditional RC helicopters but each motion is controlled by a separate channel. Do not use any channel mixing in your RC transmitter such as v-tail or swashplate mixing etc.

START TO FLY

Power ON/OFF Operations: Before plugging in the quad you have to turn on the RC and set the throttle stick to the lowest position. When powering off, you have to cut off the aircraft first then the RC powers off. Disorder in the on and off procedure will cause an accident.

1. Place the aircraft on the ground. Put the throttle stick to the lowest position then turn on the transmitter.
2. Connect the battery to the ESC board.
3. Start the Quad by applying power slowly with the throttle stick. When all the motors rotate at a slow speed you can move the stick to check the X650 Value actions according to your operation.
4. If you can not calibrate the tilt on one side during your flight, please connect Bumblebee to the PC and use the company configuration software to do the calibration.

机身臂安装 Frame Arm assembly:

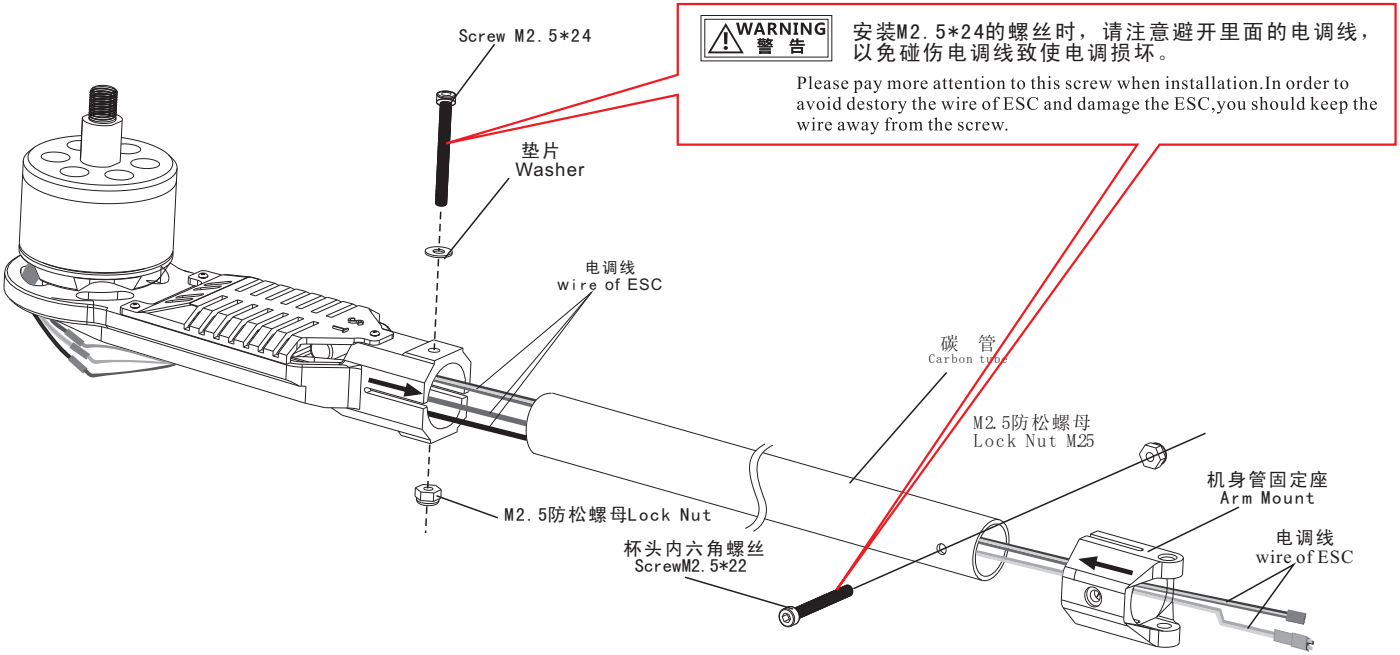

机身装配 Main Frame Assesbly(1):

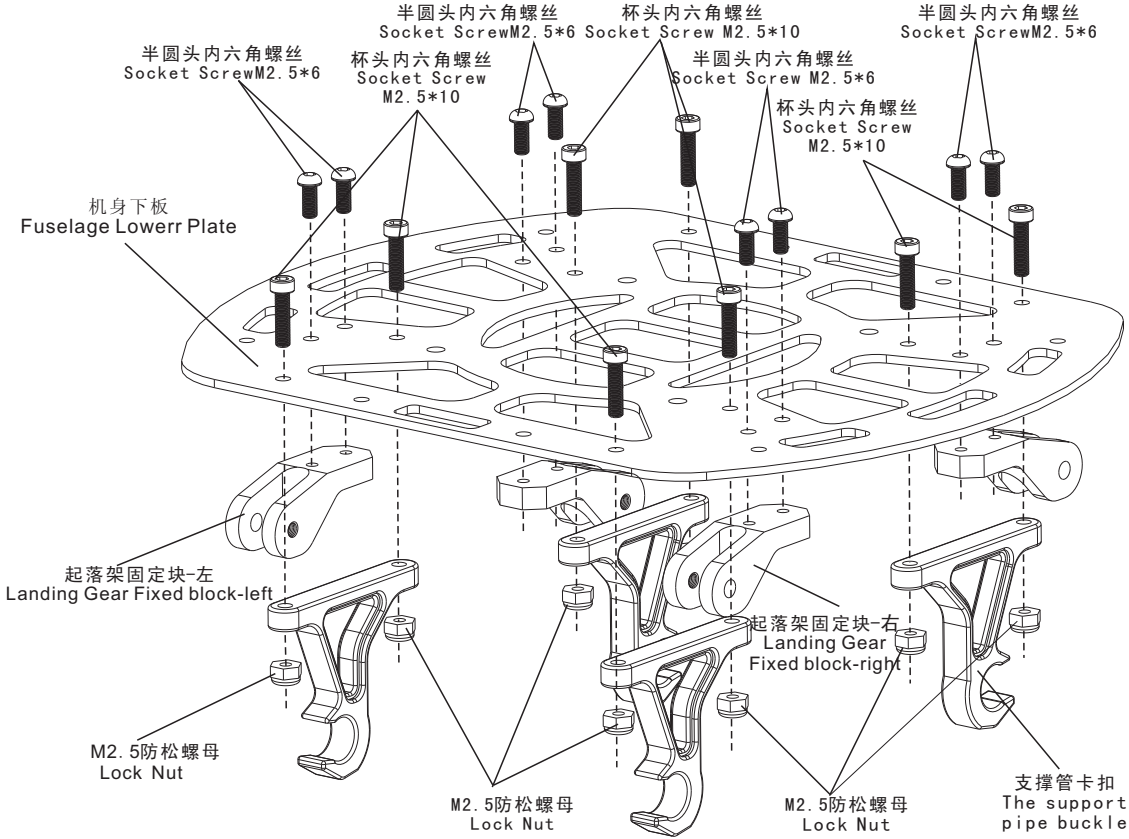

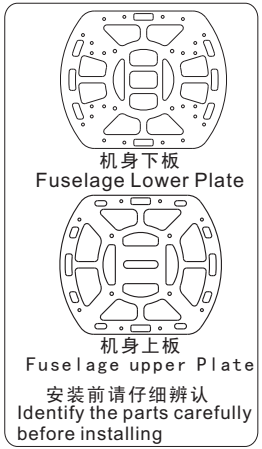

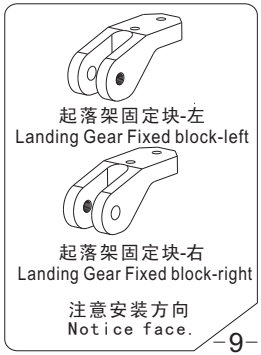

机身装配 Main Frame Assesbly(2):

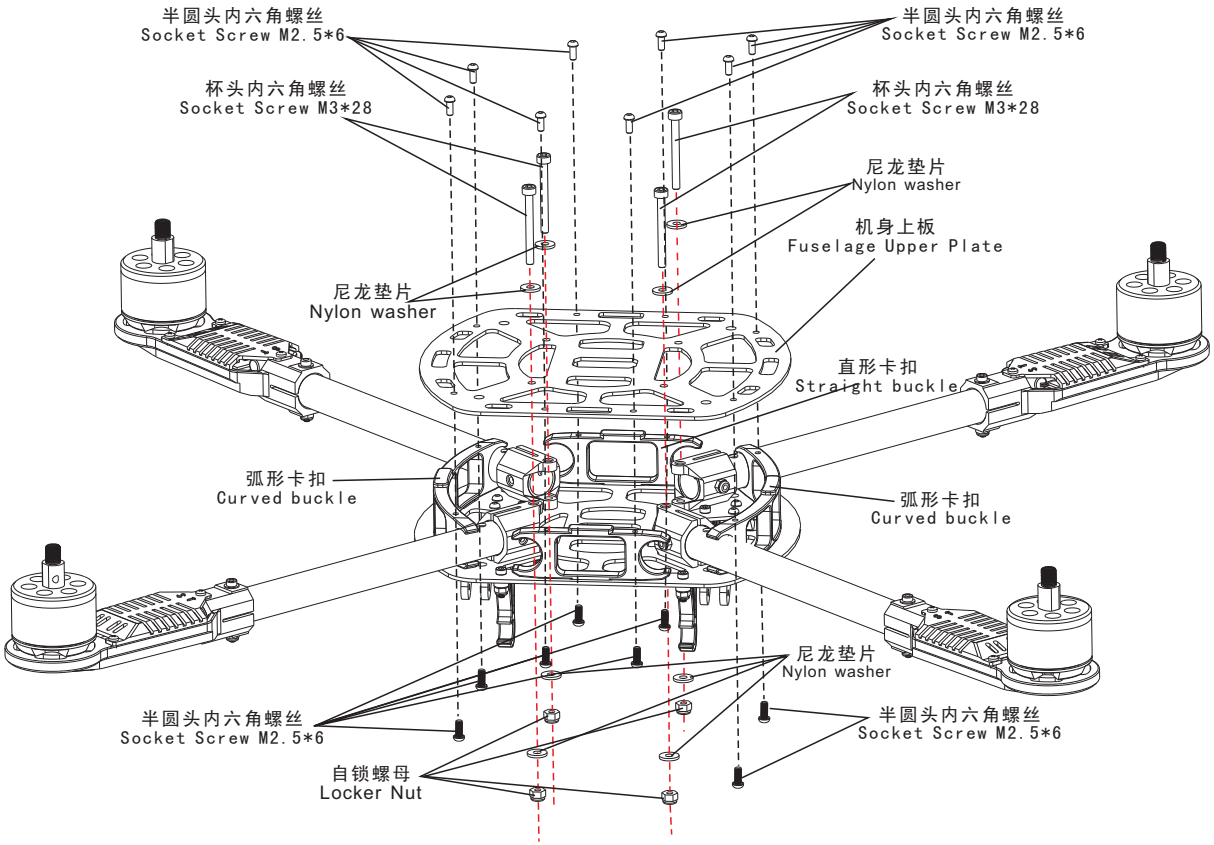

起落架安装 Landing Gear Assembly

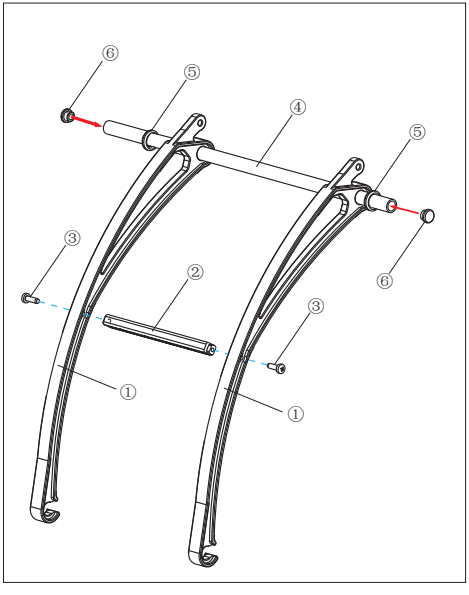

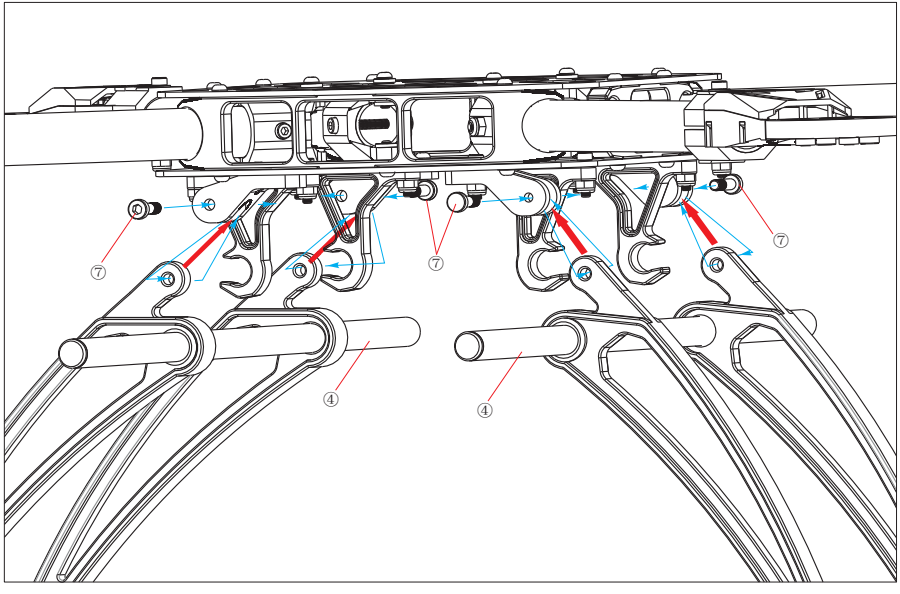

①	起落架	Landing Gear
②	起落架连接柱	Landing Gear Connector
③	圆头十字自攻螺丝	Screw PA 2.5×10
④	支撑管	Supporting Tube

⑤	硅胶套	Silicon gel- Slipcover
⑥	碳管胶塞	Plugs
⑦	杯头内六角轴套螺丝	Screw M3×12

电池板组件安装 Battery Mounting Assembly:

电池板组件Battery Assembly ：

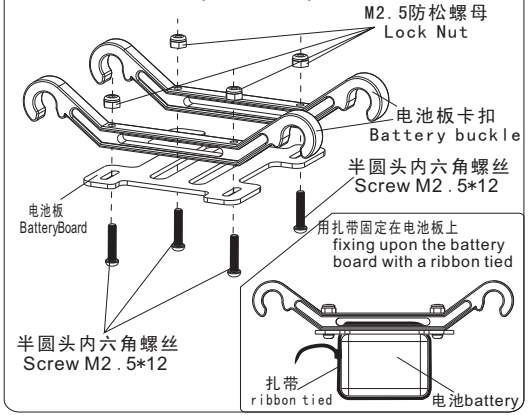

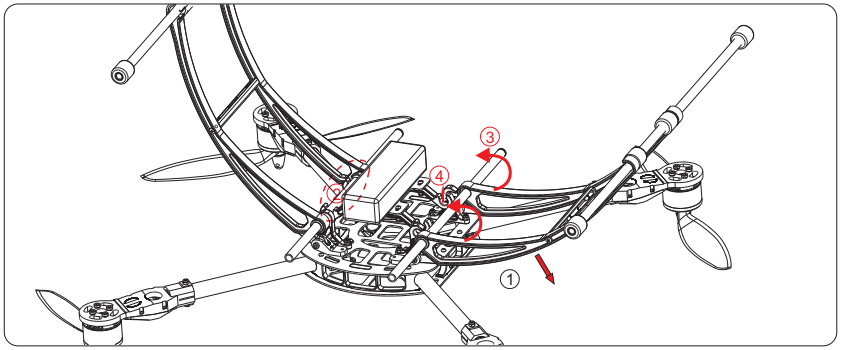

1. 先将单边起落架向侧面分开 First please separate landing gear to another side
2. 把电池板组件卡在另一边的支撑杆上 Fixing component of the battery board on another support rod
3. 分开的起落架复位 Resetting the separated landing gear frame
4. 电池板组件另一边卡扣卡在另一支撑杆上 Fixing another component of the battery board on another support rod

起落架横管安装The installation of landing gear cross tube：

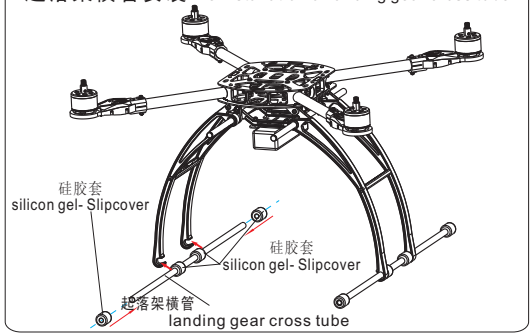

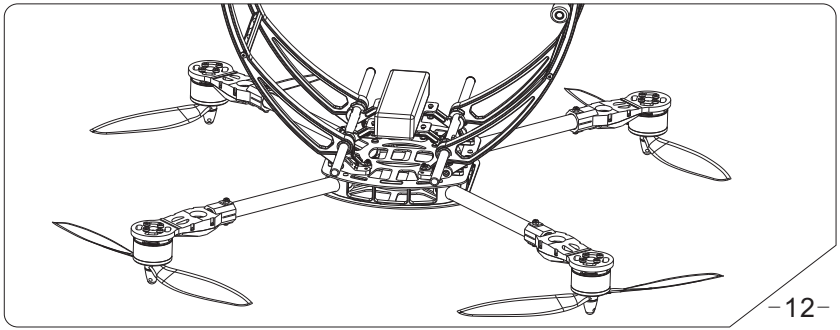

桨的安装 Propeller Installation:

ST1038
正桨2pcs

ST1038P
反桨2pcs

螺旋桨有正反之分，安装前请仔细辨认！
M1、M3相同，M2、M4相同。
There are difference of pros and cons in the propeller, please identify it carefully before installation ! M1、M3 is the same, M2、M4 is the same too.

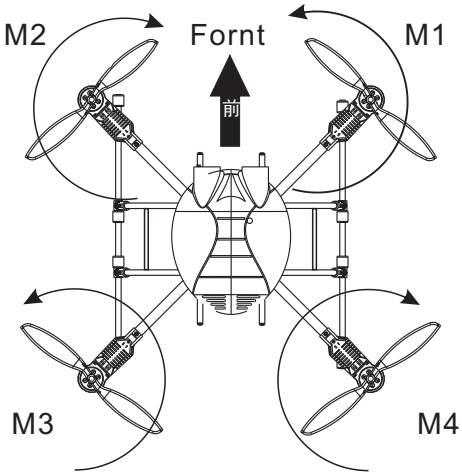

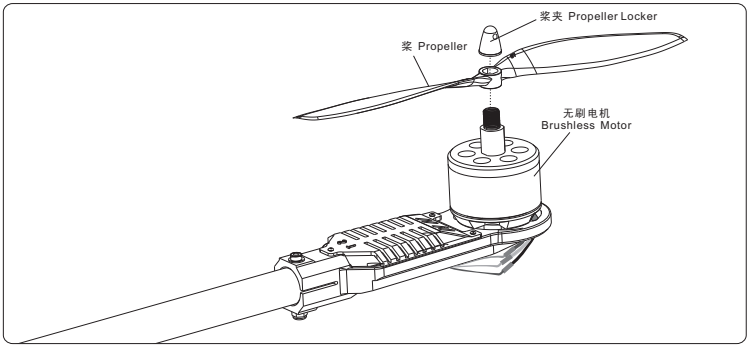

CAUTION 注 意

螺旋桨必须贴紧电机，以保证四个螺旋桨的高度一致性。

Close Motor Blade to motor to make sure 4 blades in the same height.

CAUTION 注 意

桨夹必须拧紧，以免飞行时脱桨造成危险。建议用螺丝刀穿过桨夹上的孔来拧紧桨夹。

We recommend you use the driver to poke through the hole on the locker for better tighten in case of any loose of the screw during your flight.

无桨通电测试 Power-on Test without Propellers:

电路安装完成后，请勿安装螺旋桨，进行Bumblebee无桨通电测试。

1 将遥控器油门收到最小后打开遥控器开关。
2 Bumblebee接通电源。
3 轻推油门。
4 观察四个电机启动是否顺畅，旋转方向是否正确。
   a) 如果电机没有启动或启动不畅，则将油门收到最小，断开Bumblebee的电源，检查电路和电机后重新测试，直到正常。
   b) 如果旋转方向不正确，则将油门收到最小，断开Bumblebee电源，对调任意两条电机线，直到电机旋转方向都正确。
5 推动各操纵杆，观察电机的转速是否有变化。
6 测试完成，将油门收到最小，断开Bumblebee的电源。

After electronic parts installation, DO N OT install the propellers and follow in steps.

1 Lowest the RC throttle then turn on the transmitter.
2 Power on Bumblebee.
3 Apply the throttle slowly.
4 Note if four motors rotate sm oothly
   a) If motor does not r otate or not sm oothly enough, please throttle down to the lowest t hen unplug Bumblebee . Check on electronic circuit and motors to retest until it works fine.
   b) If not in the right direction, dwer the throttle to m inim um and power off Bumblebee. Swap any motor wire of three connecting to the holes until i t works in the right way.
5 Poke all control sticks to observe motor rotation speed changes or not.
6 Throttle back to lowest and power off Bumblebee.

折叠方式 Folding Method:

支臂的折叠 Folding Arm:

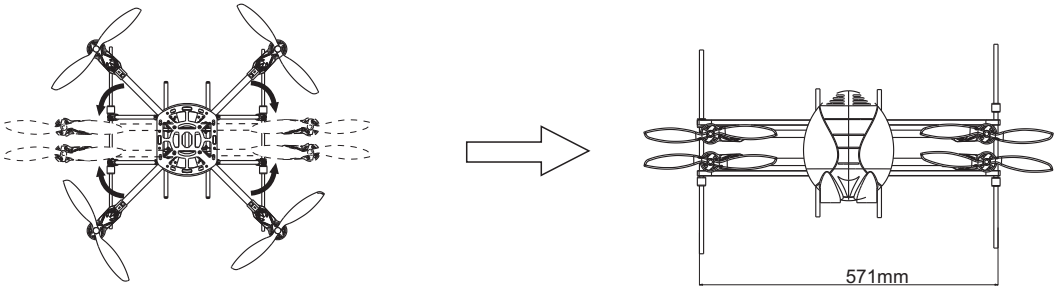

起落架的折叠 The folding of landing gear:

1. 先取下电池板组件
First pletake of component as battery board

2. 沿箭头方向将起落架拉平
Along the arrow direction to even the landing gear out

3. 起落架和支臂折叠后
After folding of landing gear and rotor wings

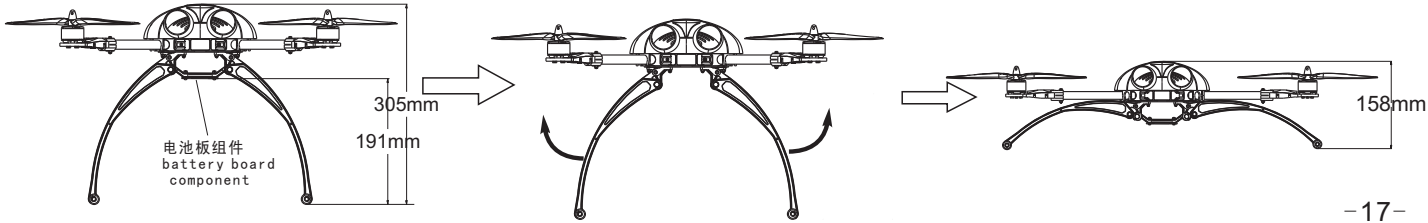

Appendix C

Transmitter Control Manual

DX8

DX8 8CH Transmitter with AR8000/TM1000: No Servos

SPM8800 $429.99*

*at participating retailers See similar products

The DX8 offers pilots control and comfort like no other 8 channel radio, built from the ground up for ease of use and optimize ergonomics.

SPEKTRUM AIRWARE™ SOFTWARE. REMARKABLY EASY TO USE.

The powerful Spektrum AirWare software in the DX8 was developed exclusively by a team of RC experts from the ground up. It includes every programming function an expert pilot could want, but you don't have to be an expert to use it. The intuitive Simple Scroll™ interface lets you "roll and click" your way between menus with ease. And all the information is presented in crisp, clear detail on a big, backlit LCD screen.

AIRPLANE FUNCTIONS

- 9 wing types: Normal, Dual Aileron, Flaperon, 1 Aileron + 1 Flap, 1 Aileron + 2 Flap, 2 Aileron + 1 Flap, 2 Aileron + 2 Flap, Elevon, Elevon-B
- 5 tail types: Normal, V-Tail, Dual Elevator + 1 Rudder, Dual Rudder + 1 Elevator, Dual Rudder + Dual Elevator
- 3-position flap with elevator compensation
- Adjustable flap speed
- Programmable aileron differential/li>
- 5-point graphic throttle curve
- Aileron rudder mixes
- Elevator/flap mixes
- 6 programmable mixes

HELICOPTER FUNCTIONS

- Governor programming
- Active governor trim
- Active gyro trim
- 5-point graphic throttle and pitch curves
- Swashplate timing
- 6 swashplate types: 1 Servo Normal, 2 Servos 180°, 3 Servos 90°, 3 Servos 120°, 3 Servos 135°, 3 Servos 140°
- Electronic E-ring

SAILPLANE FUNCTIONS

- 4 flight modes
- 4 wing types: 1 Aileron, 2 Aileron, 2 Aileron + 1 Flap, 2 Aileron + 2 Flap
- 3 tail types: Normal, V-Tail A, V-Tail B
- Motor control assignment
- Camber system
- Camber presets
- Flap-to-elevator curve mix
- Aileron-to-flap mix
- Aileron-to-rudder mix
- Elevator-to-flap mix
- 2 free programmable mixes
- Independent aileron trim per flight mode

BUILT-IN TELEMETRY. FLY SMARTER WITH VITAL MODEL FEEDBACK.

The DX8's built-in telemetry feature gives you vital, real-time information about what's happening with your model in flight; information that can prevent crashes and maximize performance. The telemetry data appears in an easy-to-read format on the large backlit LCD screen so you can reference it at a glance. You can also have the DX8 alert you with an audio or vibe alarm whenever any telemetry values exceed limits you define. The DX8 will initially be able to track four key safety and performance factors:

BATTERY VOLTAGE

Never again will you have to wonder whether or not you have enough voltage to keep flying. Being able to monitor voltage will also help you detect a worn out battery pack before it prematurely ends your flight. The telemetry module is plugged into the receiver and will automatically relay receiver voltage. A separate sensor for tracking main battery voltage in electric aircraft will be included.

TEMPERATURE

Is there enough airflow reaching an electric motor? Is my battery getting too hot? With the DX8, you will get real-time answers and be able to take action well before damage occurs. One temperature sensor is included.

SIGNAL QUALITY

The telemetry module will keep tabs on the quality of the signal coming to the receiver and send this information back to the DX8 where it is represented on the LCD screen using a familiar "signal bar" scale.

RPM

Pilots can use the RPM telemetry data to check the effectiveness of new mixture settings, new battery packs, or perhaps a new propeller/motor combination. The RPM sensor is sold separately.

*full-range telemetry module included with DX8 system

SPEKTRUM DATA INTERFACE. SHARE. EXPAND. SAVE.

Beyond new software and telemetry, the DX8 is also the first Spektrum radio to introduce the Spektrum Data Interface™. The SDI is designed for use with standard SD memory cards and adds a whole new level of flexibility and ease-of-use. With the SDI, you will be able to:

SHARE MODEL SETUPS

Share setups with other DX8 owners at the field or transfer them from your SD card to your PC and attach them to an e-mail. This makes it easy to gain from the experience of others or help others succeed.

SAVE MORE MODELS TO MEMORY

The DX8 has enough on-board memory for up to 30 models before you even need to think about using the SDI. But with the SDI, memory for thousands of models could be stored on the SD card or transferred to a PC hard drive for backup.

STAY UP TO DATE

With the Spektrum Data Interface, you won't have to send your DX8 into a service center to get the latest Spektrum AirWare enhancements. You can download them onto your SD card and upload them to the DX8 yourself.

SUPERIOR ERGONOMICS. MADE TO FIT THE WAY YOU FLY.

The DX8's weight distribution and ergonomics have been optimized to fit the way you fly. The result is a sense of balance and comfort that perfectly complements the speed and precision of DSM2 technology. Some of the more notable features include:

- Comfortable, no-slip rubber grips
- Adjustable stick length and tension
- Smooth, quad-bearing gimbals
- User-adjustable mode configurations (1, 2, 3 or 4)
- User-assigned switch functions
- Easy-to-read backlit screen
- Intuitive SimpleScroll programming interface

KEY FEATURES

- High-speed 11ms frame rate with 2048 resolution
- 30-model internal memory

PRODUCT SPECIFICATIONS

# of Channels:	8
Modulation:	DSM2/DSMX

- 30 model internal memory
- Large 128 x 64 backlit screen
- Includes TM1000 full-range telemetry module providing real-time flight log data, receiver voltage, flight pack voltage, RPM and temperature
- Includes AR8000 8-channel high-speed receiver
- Includes 2000mAh NiMH battery pack
- Includes SD card for Spektrum™ Data Interface
- Includes global 12V charger with adapters for international use
- Includes Spektrum neckstrap
- 4 user-selectable control modes (modes 1, 2, 3 and 4)
- Spektrum Data Interface for expanded model memory, model sharing and firmware updates
- Exclusive Spektrum AirWare™ software
- SimpleScroll™ programming interface for easy menu navigation
- Electronic E-ring electronically prevents overdriving the cyclic servos
- 5-point graphic tail curve
- 5-point graphic throttle and pitch curve
- Active gain and governor trim allows in-flight adjustment
- Swashplate timing
- Telemetry alerts (vibe and audible)
- 6 swashplate types
- 3-position flap switch with flap delay and elevator compensation programming
- 8 wing types and 5 tail types
- Language select (English, Italian, French, Spanish or German)
- User-assigned switch function
- Programmable throttle cut
- Refined ergonomics with no-slip comfort grips
- Programmable timer with throttle timer startup
- Quad bearing gimbals

Modulation:	DSM2/DSMX
Band:	2.4GHz
Receiver:	AR8000
Programming Features:	Airplane and Heli
Model Memory:	30
Modes:	Selectable 1, 2, 3 or 4

OVERVIEW

The DX8 is the most advanced 8-channel system you will find anywhere. Its next-generation Spektrum™ AirWare™ software, built-in telemetry, Spektrum Data Interface and superior ergonomics will completely revolutionize how you fly. And it's the only 8-channel that gives you these advanced capabilities, plus the proven speed and precision of Spektrum 2.4GHz DSMX® control.

FIVE REASONS YOU NEED A DX8

Spektrum AirWare Software
Spektrum AirWare is software developed exclusively by Spektrum from the ground up. It has all the programming functions an expert airplane or heli pilot could want, but you don't have to be an expert to use them.

Built-In Telemetry
The built-in telemetry feature on the DX8 gives you the ability to receive real-time information on things like your model's battery voltage, signal quality, engine or motor temperature and more. And it will all appear right on the big, backlit DX8 display so you can see it at a glance. (Telemetry module required, not included)

Superior Ergonomics
The weight distribution and ergonomics of the DX8 provide a sense of balance and comfort that perfectly complements the speed and precision of its DSMX technology. You really do have to feel it to believe it. Some of the more impressive ergonomic features are those usually only available on much more expensive transmitters.

Spektrum Data Interface
With the Spektrum Data Interface you can use a standard SD* card to share model setups with other DX8 owners, store extra model memory and stay up to date with the latest software releases.

ModelMatch
The DX8 features ModelMatch™ technology that prevents operating a model using the wrong model memory. This feature can prevent stripped servo gears, broken linkages and even a crash due to attempting to operate a model using the wrong memory.

Always purchase products from a Horizon Hobby, Inc. authorized dealer to ensure authentic high-quality Spektrum product. Horizon Hobby, Inc. disclaims all support and warranty with regards, but not limited to, compatibility and performance of counterfeit products or products claiming compatibility with DSM2, DSMX or Spektrum.

The DX8 transmitter is not compatible with the Spektrum AR6000/BR6000 receiver.

Attention: Horizon Hobby has confirmed that all Spektrum Products being sold by KoKo Technology are counterfeit. We consider it a danger to use these products, waive all liability and will not support any warranty or service in regards to them.

This product is not intended for use by children under 14 years of age without direct adult supervision.

Appendix D

Computerized Control Board

Setting up a Simple GeoFence in the Mission Planner

What is a GeoFence?

A GeoFence is a user-defined box that if breached forces the copter to return. It can be used as a safety measure, or as a training guide for new pilots. If they're going too far away, or too close the ground, it will take command away from them and return the copter to a point inside the box.

- A GeoFence may be either "Simple" (a user specified circle) or a "Complex" (a user defined polygon).
- A Complex GeoFence permits a polygon bounded by multiple GPS points to be specified in the Mission Planner's Flight Planner Tab along with associated actions and limitations and this data may be saved and retreived as a GeoFence file.
    - Information on Setting up Complex GeoFencing may be found on the ArduPlane web site search GeoFencing.

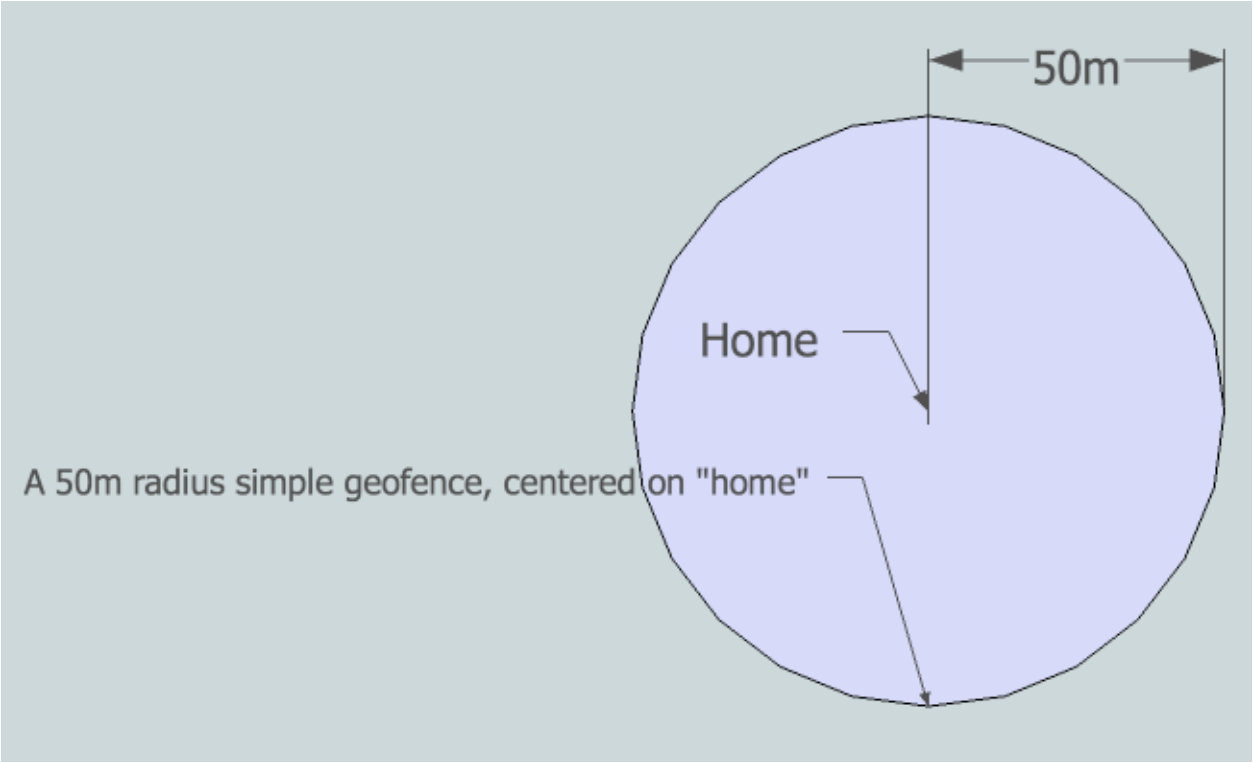

To set up a Simple (Circular) GeoFence around your launch location:

- In the Mission Planner select the Configuration Tab then select the "GeoFence" Item.

- Click on the Enable GeoFence box at the top of the page.
- Check the Simple Fence "On" box to enable the Simple Fence.
- Specify a "Radius" in meters (around your launch point) for the GeoFence bounding circle.
- In order to enable and disable GeoFencing while in flight you can specify an APM2 RC Channel to use for switching it on and off.
    - You need a spare RC channel with a toggle switch if you wish to be able to turn GeoFencing on and off while in flight.
- In addition to a bounding radius you can also set a minimum and maximum altitude which will also force a return to the center.
    - To set Altitude limits check the Alt Limits "On" box.
    - Set a minimum altitude below which it cannot go while the fence is enabled. (Set this high enough to permit recovery.)
    - Set a maximum altitude above which it cannot go while the fence is enabled.
- In order to prevent inappropriate arming, it is a good idea to check the "Enable Required Limits" box in the "Simple Fence" box.
    - You can then enable appropriate checks that will prevent arming until the specified conditions are met.
    - To prevent arming if the copter is not within the specified altitude limits, check the "Require Within Alt" box.
    - To prevent arming if the copter is not inside the specified GeoFence radius, check the "Require Inside Fence" box.
    - To guarantee that you have GPS lock before take off check the "GPS Lock Required" box.
- **Note!** You must have GPS lock before arming and taking off when you are going to use a GeoFence.

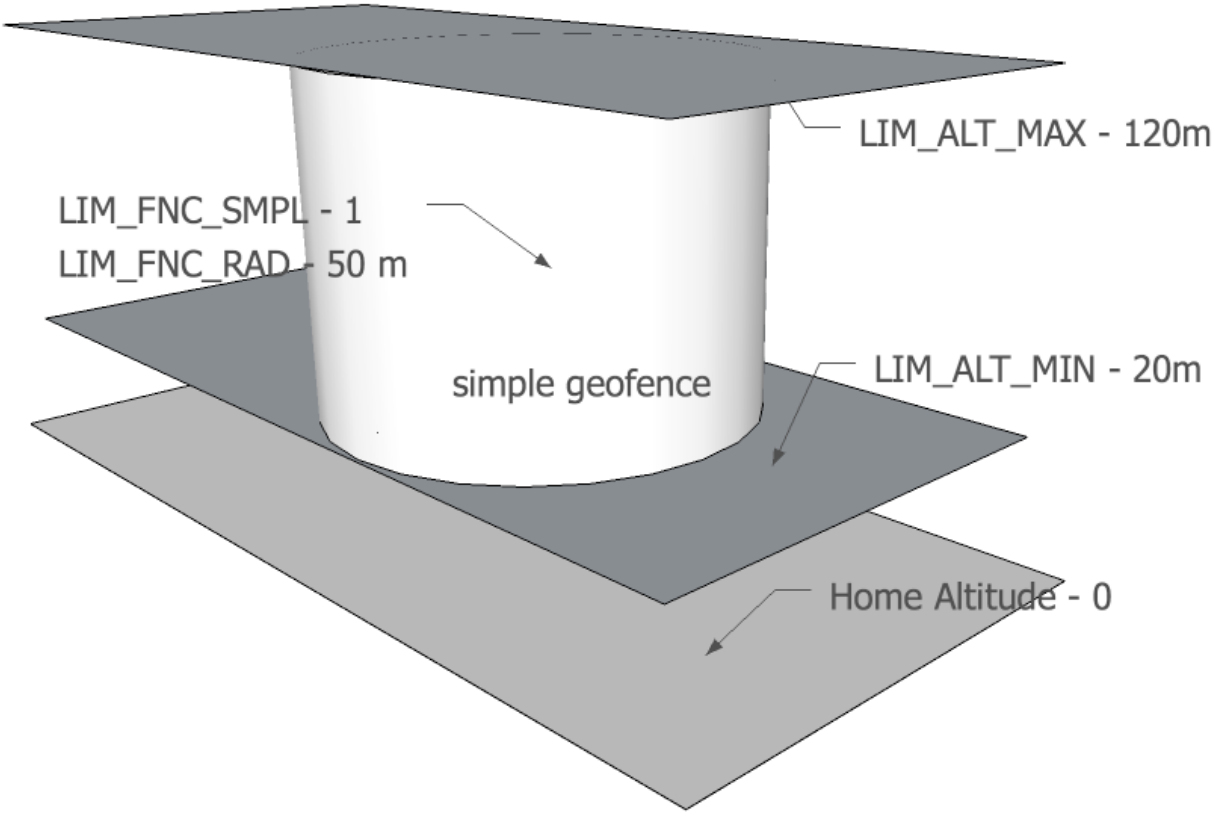

This is the track from a flight with geo-fencing enabled at my local flying area flying my SkyWalker. The white lines show the geo-fence boundary, plus you can see the return point in the middle. You can also see the points where the plane breached the geo-fence to the north, west and south. There were also numerous altitude breaches, as I was using this flight to try to improve my inverted flight skills in MANUAL mode. The plane would not have survived without the geo-fence!

Appendix F

Personal Protocols and Controls

Safety for public on the ground as well as manned aircraft above is an essential and utmost consideration for aerial videos and photography. As such, safety protocols and controls must be implemented through pre-flight preparation and during flight.

Pre-Flight Protocol:

Check batteries with voltage meter to insure fully charged and ready for use.

Inspect batteries for damage or leakage that may affect proper operation.

Inspect propellers for cracks, chips or damage that may cause sudden loss of propulsion or unmanageable/uncontrolled flight.

Check all GPS and Telemetry connections prior to flight

Check weather forecasts for wind advisory or other conditions that my impact flight.

Consult Sky Vector aeronautical Charts (Skyvector.com)for airport vicinity and flight paths of possible air traffic.

- Contact respective airport to advise of estimated flight time, estimated flight duration, estimated elevation of flight, and any other pertinent information.

Inspect flight area for

- vicinity of public safety helipads/heliports
- vicinity of medical helipads/heliports
- vicinity of light poles
- vicinity or utility wires
- vicinity of trees
- flocks of birds that may cause interference and potential flight impact
- vicinity of any elevated obstructions that may pose potential flight hazard
- vicinity of roadways with moderate to heavy traffic that can be distracted
- public gatherings that may attract viewers
- optional point of control for best visual site of UAS while in flight
- Emergency landing areas

Takeoff and landing

- inspect area for best and safest point of takeoff and landing
- if in a subdivision or area that is within 150 feet of a residential street, post warning sign(s)/stand(s) "Attention Aerial Photography In Progress - Remain Back 150 Feet "

Flight Protocol:

takeoff and land from same location (have alternate landing areas in case of emergencies)

remain alert to birds, sound or aircraft, curious public, and approaching vehicles

do not allow anyone to engage in conversation or distract the remote control pilot

restrict flight to minimal elevation sufficient to acquire desired results

remained prepared for emergency landing at all times

pay attention to flight time – warning meter for low voltage.

- set voltage meter alarm for low voltage and flight timer as a safety alert

land UAS and shut down propulsion immediately following landing – priority of disconnecting batteries

Post flight:

a) disconnect battery to prevent accidental activation of propulsion system
b) secure UAS in a safe location
c) remove all warning signs from public access areas

Emergency or Suspected Hazard:

Immediate land UAS at safest and closet ground location in the event

- manned aircraft is heard or seen in vicinity of flight
- there is a public gathering within established safety boundary wanting to observe flight
- pilot is being distracted from focusing on flight and safety
- sudden change in weather (wind bursts)
- sudden increase in vehicular traffic in vicinity of flight
- birds enter into proximity of flight
- any sudden unsafe event that can cause collision, distraction or interruption of control

Safety for public on the ground as well as manned aircraft above is an essential and utmost consideration for aerial videos and photography.

Maintaining a record of safe flight for FAA request and for determining future UAS safety protocols is imperative.

Date:_____ Location: _____

pre-flight Inspection:

- o Yes
- o No

Comment: _____

Elements

Weather	Good	Fair	Poor	Comment :
Visibility	Good	Fair	Poor	Comment :
Wind Speed	___mph	___Gusts/MPH	___avg/MPH	Comment :

Proximity to airport: _____ (see attached map pinpointing approximate location of flight)

Airport notified

- o Yes
- o No Date:_____ Time: _____

Phone Number: _____ Contact Name: _____

Nearest major intersection: _____

Proximity to medium traffic road: _____

Proximity to heavily traveled roadway road: _____

Proximity to congested population: _____

Approx. Takeoff Time : GMT:

Approx. Landing Time: GMT:

Estimated Elevation Ground level: sea level:

Safety Concerns:

Additional Comments: